ISO Registered Company

Angle Design

Globe Design

Model B7

High Flow High Sensitivity Back Pressure Relief Regulator 1/2”-3/4" (DN15-DN20)

The Model B7 is a self-contained, back pressure/relief regulator designed to control inlet setpoint pressure levels between 10-1150 psig (.69-79.3 Barg). Pressure builds up to 30% above setpoint are possible.

TYPICAL APPLICATIONS

The B7 can be applied on hyperbaric chambers, air compressors, pressurized ballast tanks, high pressure testing equipment, life support applications, manifold systems, tube trailers, and gas transfer stations.

FEATURES

- Large Piston Sensor Gives Excellent Sensitivity
- Low Operating Torque
- Material Traceability on Wetted Parts
- Anti-Resonance Design

FUNCTIONAL PERFORMANCE

Design Proof Pressure: 150% Max Operating Pressure 2250 psig (155.1 Barg)

Internal Volume: 1.77 in^3 (29 cm^3)

Design Leakage: Bubble Tight

Maximum Inlet* Pressure: 1500 psig (103.4 Barg)

NOTE These pressure ratings may be further derated by limitations through the Pressure Equipment Directive (2014/68/EU). See Table 1.

GENERAL SPECIFICATIONS

Inlet & Outlet Port Size: 1/2” and 3/4” (DN15 and DN20)

Cv Capability: 2.5 Cv

Inlet Pressure: 10-1150 psig (.69-79.3 Barg) See Position 11 - Spring Ranges.

Body End Connections: FNPT in Brass or SST; 300#, 600#, 1500#RF Flanges & Tri-Clamp in SST.

Body and Spring Chamber Material: 316L SST/316L SST -ASTM A479
Brass/Brass - ASTM B16
Brass/316L SST

Sanitary Construction:
Interior of body surface Electro Polished to 16 micro-inch Ra finish with Electro Polished exte rior.

Wetted Trim Material: See Position 6.

Trim	Temperature
Std Brass or SST	-20° to 400°F
NACE SST	-35° to 200°

Operating Temp Range: W/Plastic Knob-15° to 165°F (-25° to 75° C)
W/High Temp Spring Chamber--35° to 400°F (-37° to 205°C).

OPTIONS

NACE Construction - (6 or 7) in Position 6. - Internal wetted portions meet NACE std MR0175, when exterior of regulator is not directly exposed to a sour gas environment, buried, insulated or otherwise denied direct atmospheric exposure. SST body/spring chamber materials only. Inconel w/TFE liner, Inconel X-750 spring, Neoprene O-rings.

Panel Mount - (C) in Position 14. - The panel mount feature requires a panel minimum of 11 gauge (.12) thick with a 1-3/8" hole cut out, complete with a threaded spring housing, and a panel mount ring to secure the regulator.

Tamper Proof - (1) in Position 15. - Control knob spins freely around adjusting screw. To change set point, remove knob cover, snap ring & knob. Rotate adjusting screw CW to increase set point or CCW to decrease set point.

High Temperature Spring Chamber- (U) in Position 15. - Uses a Metal adjusting screw for temperatures up to 400°F (205° C). (SST Spring Chamber Only.)

Cleaned for Oxygen Service #S-1134- (M) in Position 17. - This is a requirement for gaseous oxygen environments. All regulators requiring advanced cleaning shall be processed according to strict guidelines. **NOTE:** Design Pressure Rating shall not exceed 375 psig (25.8 Barg) when body material is SST and process medium is oxygen.

Cleaned per Spec. #S-1542 - (N) in Position 17. - Cleaning identical to that of #S-1134, but not labeled for application in oxygen service. NOT suitable for Oxygen Service.

Sanitary Construction #S-1576- (P). in Position 17. - SST Construction - Interior of body surface Electro Polished to 16 micro-inch Ra finish with Electro Polished exterior. Tri-Clamp Ends 1/2" Size only. Unit is cleaned to Cashco Spec. #S-1576. Comply with FDA 21 CRF 177 2600 & USP Class VI material classification.

TABLE 1 Design Pressure -Temperature - End Conn Rating			
Temperature Range	**Flange End Connection PSIG (Barg)**		
Deg °F (° C)	300#	600#	1500#
-15 to +100 (-25 to +38)	720 (49.6)	1440 (99.2)	1500 (103.4)
+165 (+75)	655 (45.1)	1310 (90.3)	1500 (103.4)
+ 200 (94)	620 (42.7)	1240 (85.5)	1500 (103.4)
+ 300 (149)	560 (38.6)	1120 (77.2)	1500 (103.4)
+ 400 (205)	515 (35.5)	1025 (70.6)	1500 (103.4)
NOTE: Design Pressure Rating shall not exceed 375 psig (25.8 Barg) when body material is SST and process medium is oxygen.			

PORTING CONFIGURATION GUIDE

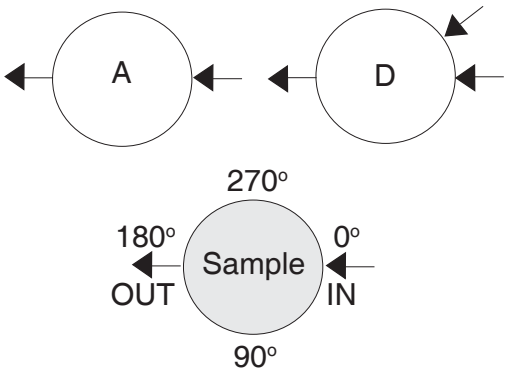

Angle

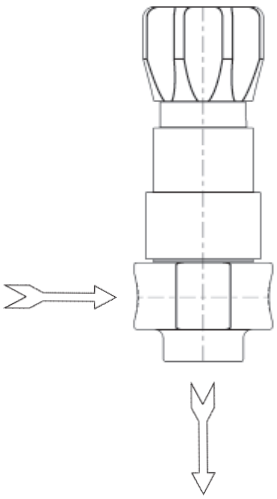

Globe

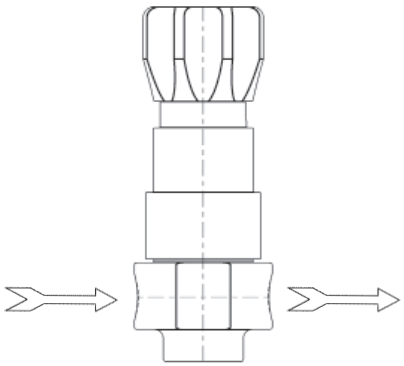

Flow Through

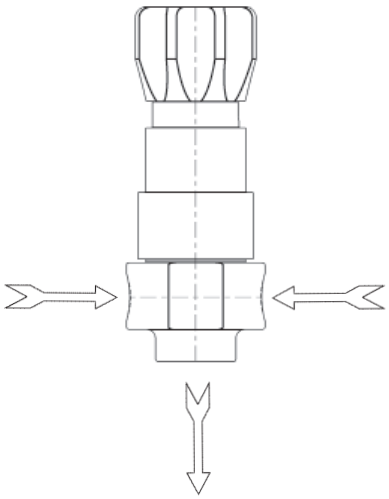

FLOW CHART for FULL PORT

Cv = 2.5

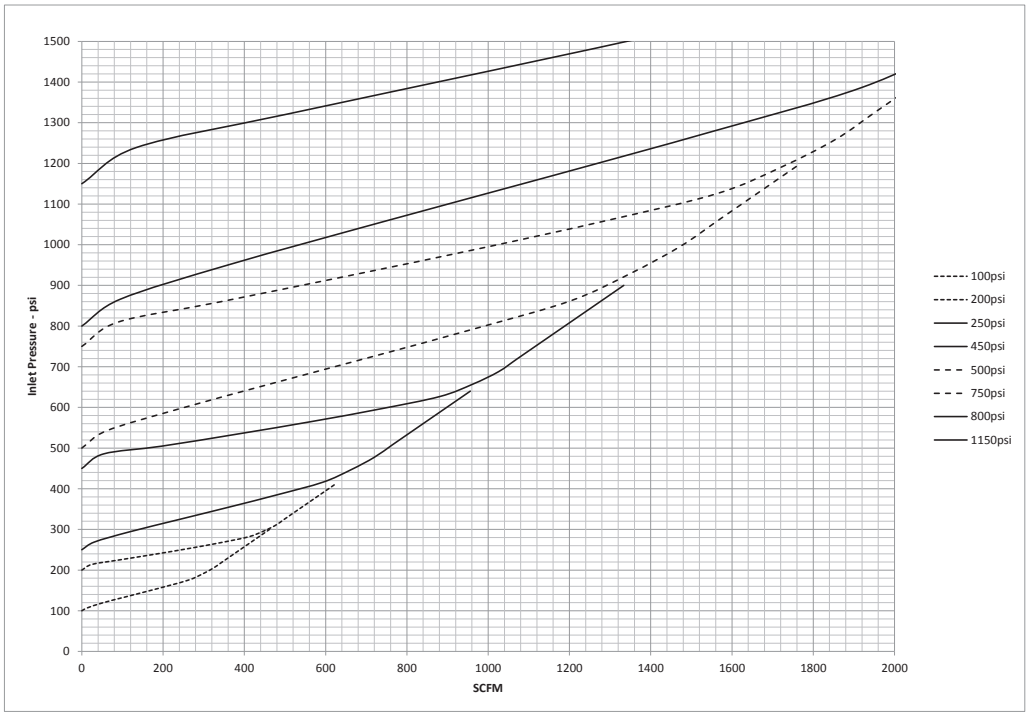

FLOW CHART for REDUCED PORT

Cv = 1.3

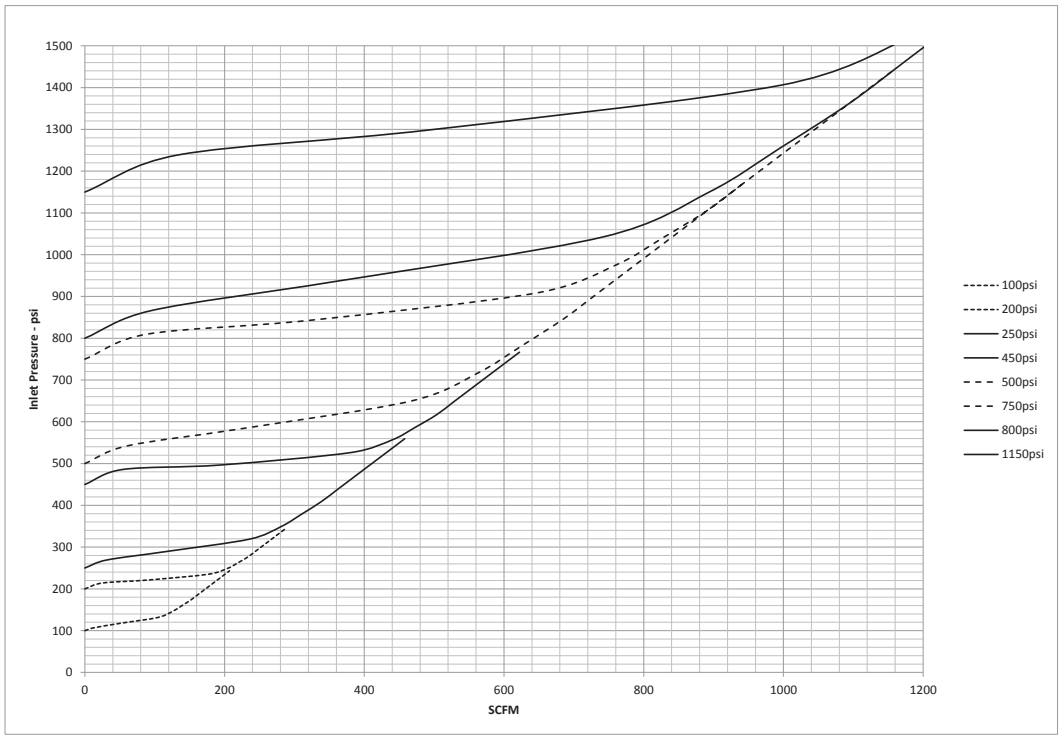

DIMENSIONS

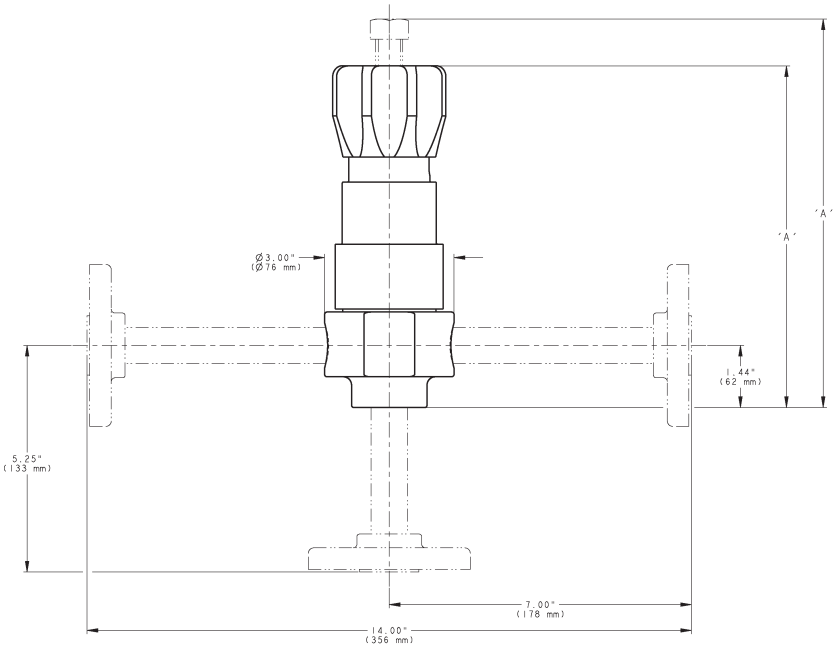

Option	Dim "A"
Std Spring Chamber	8.0" (203 mm)
High Temp Spring Chamber	9.0" (229 mm)

Weight
NPT: 7.50 lbs (3.4 kgs)
-W / Flanges: upwards
to 22 lbs. (10.0 kgs)

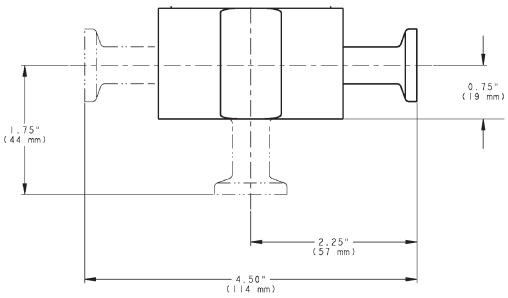

Tri-Clamp Ends

The contents of this publication are presented for informational purposes only, and while every effort has been made to ensure their accuracy, they are not to be construed as warranties or guarantees, express or implied, regarding the products or services described herein or their use or applicability. We reserve the right to modify or improve the designs or specifications of such product at any time without notice.
Cashco, Inc. does not assume responsibility for the selection, use or maintenance of any product. Responsibility for proper selection, use and maintenance of any Cashco, Inc. product remains solely with the purchaser.

MODEL B7 PRODUCT CODER 02/07/20
(COMPOSITE BLACK KNOB STANDARD)

An "X" in POS 12 followed by a 5-digit control number overrides remaining selections.

B7	POS 3	—	POS 5	POS 6	POS 7	7	—	POS 10	POS 11	POS 12	POS 13	POS 14	POS 15	0	POS 17	A

POSITION 3 - BODY SIZE/ CONN./Cv			
Size	Conn. Orientation	Cv	CODE
1/2" (DN15)	Angle	1.3	1
		2.5	2
	Globe	1.3	3
		2.5	4
	Flow Thru	1.3	5
		2.5	6
3/4" (DN20)	Angle	1.3	7
		2.5	8
	Globe	1.3	9
		2.5	A
	Flow Thru	1.3	B
		2.5	C

POSITION 5 - BODY/SPRING CHAMBER	
Body/Spring Chamber Mat'l.	CODE
Brass/Brass	B
316L SST/316L SST *	S
Brass/316L SST	T

* Select for NACE or Sanitary Construction

POSITION 6 - TRIM & SEAT MATERIALS			NACE
Trim	Seat	CODE	
Brass	Brass	1	
	PTFE	2	
SST	SST *	3	6
	PTFE *	4	7
SST w/Stellite Orifice	Stellite	5	

* Select for Sanitary Construction - Only available for Port "A". Comply with FDA 21 CRF 177.2600 & USP Class VI material classification.
Sanitary Construction not available with NACE.

POSITION 7 - PORTING CONFIGURATION	
Description	CODE
See Porting Guide	**** A
	** D

NOTE: If specifying gauges in Position 13 review asterisks as follows:

** Inlet gauge port only

**** No gauge ports available

POSITION 10 - END CONNECTIONS	
End Connection(s)	CODE
FNPT ***	1
300 # RF Flange *	7
600 # RF Flange *	8
1500 # RF Flange *	A
Tri-Clamp End * **	S

* Not available for Brass body material.
** (Tri-Clamp Available in 1/2" Size Only)
*** Not available for Sanitary Construction - Clean per #S-1576

POSITION 11 - RANGE SPRING INLET PRESSURE	
Psig (Barg)	CODE
10 - 225 (.69 - 15.5)	2
15 - 450 (1.0 - 31.0)	3
20 - 750 (1.4 - 51.7)	5
50 - 1150 (3.4 - 79.3)	6

POSITION 12 - STD OR SPECIAL DRAWING	CODE
Standard Construction	0
For Special Construction Contact Cashco for Special Product Code	X

*** For information on ATEX see pages 7 & 8 on the IOM.**

POSITION 13 - INLET GAUGE (See "NOTE" - Position 7)	
Psig (Barg)	CODE
0 - 300 (0 - 20.7)	F
0 - 600 (0 - 41.3)	G
0 - 1000 (0 - 69.0)	H
0 - 2000 (0 - 138.0)	J
No Inlet Gauge	0

POSITION 14 - OPTIONS			
OPTIONS	CODE	OPTIONS	CODE
No Option	0	Panel Mount	C

POSITION 15 - OPTIONS			
OPTIONS	CODE	OPTIONS	CODE
No Option	0	Tamper Proof	1
		High Temperature Spr Chmbr Constr. *	U

* Available with SST Spring Chamber Only

POSITION 17 - CLEANING SERVICE			
OPTIONS	CODE	OPTIONS	CODE
No Option	0	Oxygen Cleaned Per Spec #S-1134	M
		* Special Cleaning: Per Spec #S-1542.	N
		Sanitary Construction - Clean per #S-1576	P

* NOT suitable for Oxygen Service.

Cashco, Inc.
P.O. Box 6
Ellsworth, KS 67439-0006
PH (785) 472-4461
Fax. # (785) 472-3539
www.cashco.com
email: sales@cashco.com

Cashco GmbH
Handwerkerstrasse 15
15366 Hoppegarten, Germany
PH +49 3342 30968 0
Fax. No. +49 3342 30968 29
www.cashco.com
email: germany@cashco.com

Cashco do Brasil, Ltda.
Al.Venus, 340
Indaiatuba - Sao Paulo, Brazil
PH +55 11 99677 7177
Fax. No.
www.cashco.com
email: brazil@cashco.com

Printed in U.S.A. B7-TB