ISO Registered Company

TECHNICAL BULLETIN

ULR-1-TB
09-17

MODEL ULR-1

PRESSURE REDUCING REGULATOR with Unloader 1/2" – 4" (DN15 – 100)

Model ULR-1 is high performance, pressure loaded diaphragm-type, flow-to-open pressure reducing regulator. Design includes an internal pressure balancing piston-cylinder that provides high flow capacity and high pressure drop capability. The internal trim design allows the same basic unit to cover a broad range of pressure settings. Performance meets or exceeds that of competitive pressure loaded or pilot-operated designs. A back pressure regulator or "unloader" is piped to the top of the dome and is "set" to control the outlet pressure of the pressure reducing regulator.

FEATURES

Versatile: Five basic materials and multiple trim material combinations to select from. Multiple methods of pressure loading.

Tight Shutoff: Multiple composition materials provide Class IV or VI inboard leakage rates. Designed as a soft-seated valve.

Capacity: Highest in the industry. Allows smaller body sizes than competitors in majority of applications.

Droop: Highly accurate outlet pressure control, due to absence of range spring in design, provides almost zero “droop effect”.

Trim Design: FTO and pressure balancing allows for higher inlet pressure. Results in unmatched sensitivity and stability. Internals are cage-contained within easily removable quick change trim.

Rangeability: Basic valve gives outstanding rangeability due to close tolerances, balanced trim, and a broad range of elastomeric and metallic diaphragms and soft seats. Can be as high as 2000:1.

Heavy-Duty Guiding: Both top and bottom guided to maintain stability and increased diaphragm life.

Failure Position: Fails closed on loss of loading pressure.

APPLICATIONS

“Designed as a gaseous service regulator. Excellent for atmospheric industrial gases – GN_2, GOX, Ar, He, H_2, CO_2. Can be used as a utilities air regulator.

STANDARD / GENERAL SPECIFICATIONS

Body / Cover Dome Materials

DI/DI	BRZ/BRZ	SST/DI
CS/DI	BRZ/DI	SST/CS
CS/CS	SST/SST	

DI = Ductile Iron CS = Carbon Steel BRZ = Bronze
SST = Stainless Steel

Body Sizes

1/2", 3/4", 1", 1-1/4", 1-1/2", 2", 2-1/2", 3", 4".
(DN15, 20, 25, 32, 40, 50, 65, 80, 100)

End Connections

Standard: Female NPT.
ASME Flanged: 125#, 150#, 250#, 300#, 600#;
DIN Flanged: PN16, PN25, PN40;
(Integral Flanged Body unless listed under Opt.-30)
Opt-31: British Standard Pipe Threads.
Opt-34: 14" Face to Face Flange Dimension.

Max. Useable Cv

See TABLE 7 for Wide Open Cv Limits.

Body Size		Comp. Cv	Body Size		Comp. Cv
in	(DN)		in	(DN)	
1/2"	(15)	3.6	2"	(50)	54
3/4"	(20)	7.2	2-1/2"	(65)	81
1"	(25)	13.5	3"	(80)	108
1-1/4"	(32)	20.7	4"	(100)	198
1-1/2"	(40)	27.0			

METRIC CONVERSION FACTOR: Cv / 1.16 = kv

Max Operating Pressure

475 psig (32.8 Barg).
See TABLES 1A through 1F for design P vs. T limits.

Outlet Pressure Range

2.0 - 400 psig (0.13 - 27.6 Barg).
Multiple spring - ranges dependent on selection of the unloader. See Position 13 of the coder.

Function of diaphragm material. See TABLE 6.

Pressure Drop Limits

5–355 psid (.34 – 24.5 Bard)
Function of service fluid, base trim material, diaphragm and dynamic seal design. See TABLES -2, -3, -4 & -6.

Temperature Ranges

-425° to +400°F (-254° to +204° C)
Limited by body/cover dome material combinations. See TABLE 1A through 1F.

-65° to +400°F (-54° to +205°C)
Also limited by diaphragm, elastomeric seat, static seal, dynamic seal materials. See TABLE 5.

Alternate: "CS" Mat'l - Steel - ASTM A352 Gr. LCC - Minimum temperature -50 °F (-46 °C).

Inboard Leakage Rate

See TABLE 10

Lower Piston Spring

No lower piston spring; $P_2 = P_{Load}$.
Lower piston spring required; $P_2 < P_{Load}$.
See TABLE-9 for available spring ranges.
NOTE: Use a lower piston spring with the following applications:
1. When decaying inlet may reach 0 psig.

Optional Constructions

Opt-30: Weld-on Flanges
Opt-31: BSP End Conns.
Opt-34: Special 14" F to F
Opt-55: Oxygen Cleaned
Opt-56: Special Cleaned
Opt-85: Extra Set Pressure Taps
Opt-95: Epoxy Paint
Opt-95OS: Epoxy Paint

Unloader Specifications

Self contained back pressure regulator. 1/4" Size, NPT connections. Available with Bronze or SST body and spring chamber. S2 Trim - SST metal seat and diaphragm. 1/4" NPT bug screen vent in outlet connection. Range springs from 2 to 400 psig. (See Position 13 on the coder.) See Position 14 on coder for selection of materials for connecting tubing, orifice and filters.

ABBREVIATIONS		
FK = Fluorosilicone	NBR = Buna-N	PTFE = Polytetrafluoroethylene
FKM = Fluorocarbon	RTFE = Brz-fill TFE	V-TFE = Virgin TFE
EPR = Ethylene Propylene	GF-TFE = Glass-fill TFE	CTFE = Chlorotrifluoroethylene
BC = Neoprene	PA = PolyAll	

MATERIAL SPECIFICATIONS

Body

DI – ASTM A395
CS – ASTM A216, Grade WCB.
Alternate ASTM A352 Grade LCC
BRZ – ASTM B62, Alloy 83600,
SST – ASTM A351, Grade CF3M.

See TABLES 1A through 1F for material specs.

Cover Dome

DI – ASTM A395
CS – ASTM A216, Grade WCB.
Alternate ASTM A352 Grade LCC
BRZ – ASTM B62, Alloy 83600,
SST – ASTM A351, Grade CF3M

Metallic Trim *

Plug, Cage: 17-4PH SST, 316L SST,
Nickel-Copper Alloy (Monel†),

PART	TRIM DESIGNATION			
	P	M	S	T
Plug	17-4 PH SST	Monel †	316L SST	17-4 PH SST
Guide Bearing	17-4 PH SST	Monel †	316L SST	17-4 PH SST
Cage	316L SST	Monel †	316L SST	Monel†
Body Bushing	17-4PH SST	Monel †	Monel†	Monel†

Diaphragm *

Elastomeric – BC, EPR, FKM, FK, NBR, FKM+TFE.

Seat *

PolyAll, V-TFE, GF-TFE, CTFE, BC, NBR

Static Seals (See Fig. F1) *

NBR, FKM, FK, EPR - o-ring
SST/TFE (1/2"–2") (DN15–50) sizes,
V-TFE (2-1/2"–4") (DN65–100) sizes.

Dynamic Seals (See Fig. 1) *

Type OR - NBR, FKM, FK, EPR - o-ring seal.
Type UC – V-TFE u-cup seal w/ 316L SST energizer
Type CW – TFE cap seal with o-ring energizer (o-ring material same as static seal) and GF-TFE wiper backup seal.

Painting

Standard: All non-corrosion resistant portions to be painted with corrosion resistant epoxy paint per Cashco Spec #S-1606.
Alternate: See Opt-95 or Opt-95OS.

* See Product Coder for acceptable combinations.
† Monel™ and Inconel® are registered trade names:
Monel™ is a mark owned by International Nickel Co.
Inconel® is a mark owned by International Nickel Co.

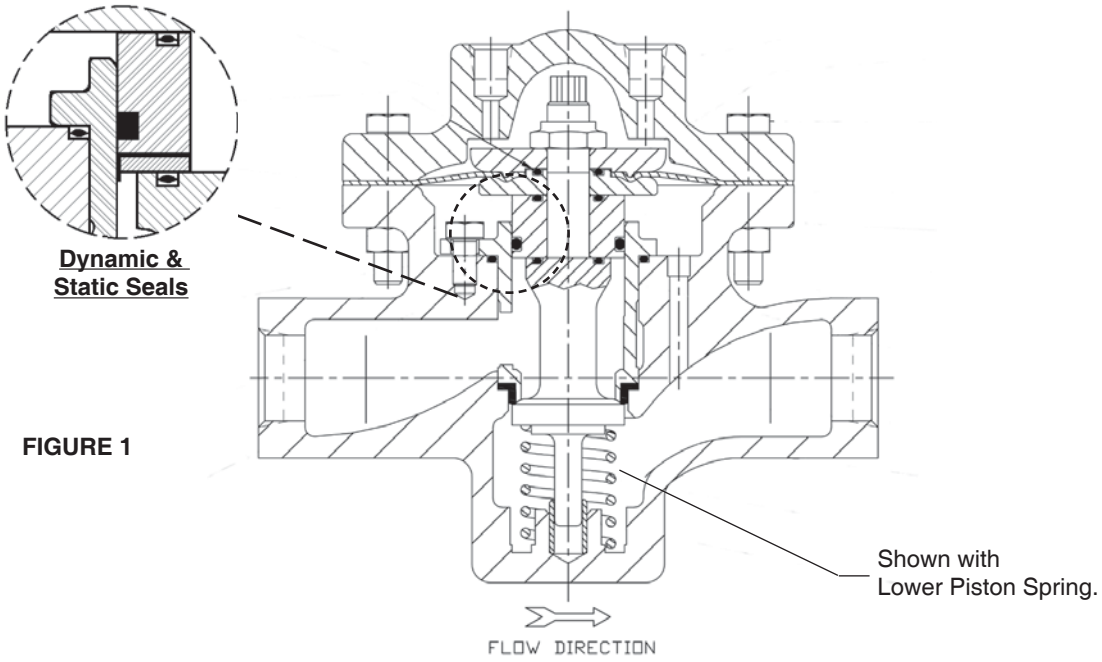

FIGURE 1

OPTION SPECIFICATIONS

OPT-30: **WELD FLANGED CONNECTIONS.** CS, or SST body materials only. 1/2" – 1-1/2" (DN15–40) body sizes only (no 1-1/4" (DN32) size). Weld-on flange of same general chemistry as body.

Weld-On Flanges		
Sizes	**Body Material**	**ASME Pressure Class**
1/2" - 3/4"	CS, SST	150, 300, 600
1"	CS, SST	600
Sizes	**Body Material**	**ISO Pressure Class**
DN15-50	CS, SST	PN40 RF
DN65-100	CS, SST	PN16, 25, 40 RF

NOTES: 1. The body P vs. T ratings are the limiting variables for flanged end connections, unless further restricted by ASME B16.5.
2. No post-weld stress relieving performed.

OPT-31: **BSP END CONNECTIONS.** British Standard Pipe threads per ISO 7/1; used as an alternate to NPT ends. 1/2" – 2" (DN15–50) sizes only.

OPT-34: **SPECIAL 14" FACE TO FACE DIMENSION FOR FLANGED END CONNECTIONS.** Sizes 1/2" - 1", 1-1/2" & 2" only. See Opt-30 for standard face to face dimension.

OPT-55: **SPECIAL CLEANING - GOX**. BRZ or SST body materials only. Cleaning, assembly and packaging per Cashco Spec #S-1134, making unit suitable for Oxygen Service. **NOTE: Design Pressure Rating shall not exceed 375 psig (25.8 Barg) when body/topworks material is SST and process medium is oxygen.**

OPT-56: **SPECIAL CLEANING**. Cleaning per Cashco Spec. No. S-1542 for all body/cover dome materials. Higher cleaning level than std. commercial cleaning. NOT suitable for Oxygen Service.

OPT-85: **PRESSURE TAPS**. Provides second set of inlet and outlet 1/4" (DN8) - FNPT taps with plugs (same basic material as body) on backside of body. Includes second external sensing port tap. See Figure F2 for details on tap location for both STD. and Opt-85.

OPT-95: **EPOXY PAINT**. Special epoxy painting of all non-corrosion resistant external surfaces per Cashco Spec #S-1547. Utilized in harsh atmospheric conditions.

OPT-95OS: **EPOXY PAINT**. Special epoxy painting of all non-corrosion resistant external surfaces per Cashco Spec #S-1687. Utilized in OFFSHORE atmospheric conditions.

TECHNICAL SPECIFICATIONS APPENDIX INDEX

TABLE	TITLE	PAGE
1A	DI – Press vs Temp vs End Conn Ratings	5
1B	BRZ – Press vs Temp vs End Conn Ratings	6
1C	CS – Press vs Temp vs End Conn Ratings - Design Inlet	7
1D	Design Outlet	7
1E	SST – Press vs Temp vs End Conn Ratings – Design Inlet	8
1F	Design Outlet	8
2	Max Pressure Drop - Comp Seat	9
3	Max Pressure Drop - Dynamic Seal Design	9
4	Max Pressure Drop - Basic Trim Mat'ls	9
5	Temperature Limits – Elastomer Mat'ls.	10
6	Max Diaphragm Rating	10
7	Reducer Max Capacity - Plug Wide Open	11
8	Pressure Loading System Tubing & Fitting Maximum Containment Pressure Process or Auxiliary Fluids	11
9	Reducer Lower Piston Spring range	11
10	Inboard Leakage Ratings	12
11	Reducer Recommended Velocity Limits	12
12	Max Recommended Noise Limits	12
13	Recommended Internal Materials - Gases	13
	Supplement - Chemical Resistance	13
14	ISR Effect	14
FIGURE		
F1	Dynamic/Static Seals	14
F2	Location of Body Taps	15

TABLE 1A
DI – DUCTILE IRON
BODY / TOPWORKS MATERIAL SPECIFICATIONS
DESIGN PRESSURE vs. TEMPERATURE vs. END CONNECTION RATINGS
(To ASME B16.1 for Flanged and B16.4 for NPT Connections per Cast Iron Rating)

Material Specifications (Body / Topworks)		End Connection – Inlet & Outlet			
		Temperature °F	Containment Pressure – psig		
			End Connection – Pressure Class		
Description (Abbr.)	ASTM No.		NPT	125# FF	250# RF
DI/DI (Note 1)	A395/ A395	-20° to +150°	400	200	500
		200°	370	190	460
		225°	355	180	440
		250°	340	175	415
		300°	310	165	375
		350°	300	150	335
		400°	250	140	290
		406°	250	140	290
		Temperature °C	Containment Pressure – Barg		
			End Connection – Pressure Class		
			NPT	125# FF	250# RF
		-29° to +65°	27.6	13.8	34 .5
		107	24.5	12.5	30.2
		120°	23.4	12.1	28.7
		150°	21.2	11.2	25.7
		177°	19.2	10.6	23.8
		204°	17.5	9.6	20.3

NOTE 1: Whenever body and topworks materials are mixed, the P vs. T ratings that should be applied are those which are lowest of the two materials.

Example: CS body, DI topworks; NPT end connections, 200°F temperature.
Because the topworks is not “end flanged”, use DI limits of "400 PSIG CWP 370/200F" from above to compare to CS limits from Table 1C value. The DI limits are lower, so ratings from Table1A MUST be used as the limits.

TABLE 1B
BRZ – BRONZE
BODY / TOPWORKS MATERIAL SPECIFICATIONS

DESIGN PRESSURE vs. TEMPERATURE vs. END CONNECTION RATINGS
(Per ASME B16.24 for Flanged and B16.15 for NPT Connections)

Material Specifications (Body / Topworks)		End Connection – Inlet & Outlet			
Description (Abbr.)	ASTM No.	Temperature °F	Containment Pressure –psig		
			End Connection – Pressure Class		
			NPT	150# FF	300# FF
BRZ/BRZ (Note 1)	B62, Alloy C83600/B62, Alloy C83600	-325° to +150°	700 † / 500	225	500
		175°	390	220	480
		200°	385	210	465
		225°	375	205	445
		250°	365	195	425
		300°	335	180	390
		350°	300	165	350
		400°	250	150	315
		406°	250	150	315
		Temperature °C	Containment Pressure – Barg		
			End Connection – Pressure Class		
			NPT	150# FF	300# FF
		-198° to +65°	48.3 † / 34.5	15.5	34.5
		107°	25.8	14.0	30.8
		120°	25.1	13.5	29.5
		150°	23.0	12.4	26.8
		177°	20.4	11.3	24.0
		204°	17.8	10.3	21.4

† Use 700 psig (48.2 Barg) inlet / 500 psig (34.4 Barg) outlet at 150°F as maximum limits.

NOTE 1: Whenever body and topworks materials are mixed, the P vs. T ratings that should be applied are those which are lowest of the two materials.

Example: BRZ body, DI topworks; NPT end connections, ambient temperature.
Because the topworks is not “end flanged”, use the DI limits of "400 PSIG CWP 370/200F" from TABLE 1A to compare to above TABLE 1B values. The DI limits are lower, so ratings from TABLE 1A MUST be used as the limits.

Body Material Specifications

Cast Steel A216 Gr.WCB or Steel Weldment A216 Gr. WCB w/ forged flanges A105

Alternate Material: Cast Steel A352 Gr. LCC or Steel Weldment A352 Gr. LCC w/ forged flanges A350 Gr. LF6 Class 2

Topworks Material Specifications

Cast Steel A216 Gr. WCB

Alternate Material: Cast Steel A352 Gr. LCC

DESIGN PRESSURE vs. TEMPERATURE vs. END CONNECTION RATINGS

(Per ASME B16.5 and B16.34) See NOTE 1

TABLE 1C
DESIGN INLET PRESSURE
in PSIG (BARG)

DESIGN TEMP. RANGE: Deg F (Deg C) **	END CONNECTIONS			
	NPT, BSP	600#	150#	300#
-20 to +100 (-29 to +38)	1480 (102.1)	1480 (102.1)	285 (19.6)	740 (51.1)
-20 to +200 (-29 to +93)	1360 (94.2)	1360 (94.2)	260 (17.9)	680 (47.1)
-20 to +300 (-29 to +149)	1310 (90.3)	1310 (90.3)	230 (15.8)	655 (45.1)
-20 to +400 (-29 to +204)	1265 (87.3)	1265 (87.3)	200 (13.7)	635 (43.6)

** Alternate Mat'l: ASTM 352 Gr. LCC Minimum Temperature -50 °F (-46 °C).

TABLE 1D
DESIGN OUTLET PRESSURE
in PSIG (BARG)

DESIGN TEMP. RANGE: Deg F (Deg C) **	END CONNECTIONS		
	NPT, BSP, 600#	150#	300#
-20 to +100 (-29 to +38)	750 (51.7)	285 (19.6)	740 (51.1)
-20 to +200 (-29 to +93)	680 (47.1)	260 (17.9)	680 (47.1)
-20 to +300 (-29 to +149)	655 (45.1)	230 (15.8)	655 (45.1)
-20 to +400 (-29 to +204)	635 (43.6)	200 (13.7)	635 (43.8)

** Alternate Mat'l: ASTM 352 Gr. LCC Minimum Temperature -50 °F (-46 °C).

NOTE 1: These pressure ratings may be further derated by limitations through the Pressure Equipment Directive (2014/68/EU). Whenever body and topworks are mixed, the P vs. T ratings that should be applied are those which are lowest for the two materials.

Example: 600 lb. RF flanged steel body, full support diaphragm construction, at 200 deg F maximum temp would have a preliminary inlet to 3375 psig and outlet to 1350 psig, but if fitted with a ductile iron topworks pressure rating is only 370 psig. Must derate both the inlet and outlet to 370 psig. (Note: Topworks pressure rating, same as NPT design outlet pressure rating for the selected topworks material and diaphragm type.

Body Material Specifications

Cast Stainless Steel A351 Gr.CF3M or Stainless Steel Weldment A315 Gr. CF3M w/ forged flanges A182 Gr. F 316L

Topworks Material Specifications

Cast Stainless Steel A351 Gr.CF3M

DESIGN PRESSURE vs. TEMPERATURE vs END CONNECTION RATINGS

(Per ASME B16.5 and B16.34) See NOTE 1

TABLE 1E
DESIGN INLET PRESSURE
in PSIG (BARG)

DESIGN TEMP. RANGE: Deg F (Deg C)	END CONNECTIONS			
	NPT, BSP	600#,	150#	300#
-425 to +100 (-254 to +38)	1440 (99.3)	1440 (99.3)	275 (19.0)	720 (49.6)
-20 to +200 (-29 to +93)	1240 (86.1)	1240 (86.1)	235 (16.5)	620 (43.0)
-20 to +300 (-29 to +149)	1120 (77.1)	1120 (77.1)	215 (14.8)	560 (38.6)
-20 to +400 (-29 to +204)	1025 (70.9)	1025 (70.9)	195 (13.6)	515 (35.5)

TABLE 1F
DESIGN OUTLET PRESSURE
in PSIG (BARG)

DESIGN TEMP. RANGE: Deg F (Deg C)	END CONNECTIONS		
	NPT, BSP, 600#	150#	300#
-425 to +100 (-254 to +38)	625 (43.0)	275 (19.0)	625 (43.0)
-20 to +200 (-29 to +93)	620 (42.3)	235 (16.5)	620 (42.3)
-20 to +300 (-29 to +149)	560 (38.6)	215 (14.8)	560 (38.6)
-20 to +400 (-29 to +204)	515 (35.5)	195 (13.6)	515 (35.5)

NOTE 1: These pressure ratings may be further derated by limitations through the Pressure Equipment Directive (2014/68/EU). Whenever body and topworks are mixed, the P vs. T ratings that should be applied are those which are lowest for the two materials.
Example: 300 lb. RF flanged SST body, standard diaphragm construction, at 200 deg F maximum temp would have a preliminary inlet and outlet to 620 psig, but if fitted with a ductile iron topworks pressure rating is only 400 psig. Must derate both the inlet and outlet to 400 psig. (Note: Topworks pressure rating, same as NPT design outlet pressure rating for the selected topworks material and diaphragm type.
The ratings are the same as above, if substitute steel topwork material.
300# Flanges are derated due to the bolting for these products.

TABLE 2
MAXIMUM PRESSURE DROP FOR COMPOSITION SEATS

Body Size		Max. Pressure Drop - psid (Bard)			
		Seat Material			
in	(DN)	BC, NBR, POLYALL		GF-TFE	
1/2" – 1"	(15-25)	750	(51.7)	1000	(68.9)
1-1/4" – 1-1/2"	(32-40)	600	(41.3)	900	(62.0)
2"	(50)	600	(41.3)	750	(51.7)
2-1/2" – 4"	(65-100)	600	(41.3)	750	(51.7)
		V-TFE		CTFE	
1/2" – 1"	(15-25)	600	(41.3)	3000	(206.9)
1-1/4" – 1-1/2"	(32-40)	600	(41.3)	3000	(206.9)
2"	(50)	600	(41.3)	2000	(137.9)
2-1/2" – 4"	(65-100)	450	(31.0)	1500	(103.4)

TABLE 3
MAXIMUM PRESSURE DROP FOR DYNAMIC SEAL DESIGNS

Body Size		Max. Pressure Drop - psid (Bard)					
		Dynamic Seal Design					
in	(DN)	"OR" – O-RING		"CW" – TFE CAP w/WIPER		"UC" - U-CUP	
1/2" – 1"	(15-25)	750	(51.7)	600	(41.3)	3000	(206.9)
1-1/4" – 1-1/2"	(32-40)	750	(51.7)	600	(41.3)	3000	(206.9)
2"	(50)	750	(51.7)	600	(41.3)	3000	(206.9)
2-1/2" – 4"	(65-100)	750	(51.7)	600	(41.3)	3000	(206.9)

TABLE 4
MAXIMUM PRESSURE DROP FOR BASIC TRIM MATERIAL

Body Size		Max Pressure Drop - psid (Bard)							
		Basic Trim Material							
in	(DN)	"P" – 17-4PH SST		"S" – 316L SST		"M" – Monel		"T" – Hybrid *	
1/2" – 2"	(15-50)	3000	(206.9)	800	(55.1)	1500	(103.4)	3000	(206.9)
2-1/2" – 4"	(65-100)	3000	(206.9)	800	(55.1)	1500	(103.4)	3000	(206.9)
* 17-4PH SST plug & piston, Monel cage.									

TABLE 5
TEMPERATURE LIMITS
FOR ELASTOMERIC MATERIALS

Elastomer			T Maximum		T Minimum	
	ID	Description	°F	(°C)	°F	(°C)
Seats	PolyAll	Proprietary Polyurethane Derivative	225°	(107°)	-60°	(-51°)
	GF-TFE	Glass-filled Polytetrafluorethylene	425°	(218°)	-325°	(-198°)
	V-TFE	Virgin TFE	400°	(205°)	-325°	(-198°)
	CTFE	Chlorotrifluoroethylene TFE	300°	148°)	-325°	(-198°)
	BC	Neoprene	225°	(107°)	-35°	(-37°)
	NBR	Buna-N	320°	(160°)	-40°	(-40°)
Diaphragms	BC	Neoprene (Polychloroprene)	250°	(121°)	-65°	(-54°)
	EPR	Ethylene Propylene	300°	(148°)	-40°	(-40°)
	FK	Fluorosilicone	350°	(177°)	-65°	(-54°)
	FKM	Fluorocarbon Elastomer	400°	(205°)	0°	(-17°)
	NBR	Buna-N (Nitrile)	250°	(121°)	-70°	(-56°)
	FKM+TFE	Fluorocarbon Elastomer + TFE	400°	(205°)	0°	(-17°)
Static Seals	V-TFE	Virgin TFE	400°	(205°)	-325°	(-198°)
	EPR	Ethylene Propylene	300°	(148°)	-40°	(-40°)
	FK	Fluorosilicone	350°	(177°)	-65°	(-54°)
	FKM	Fluorocarbon Elastomer	400°	(205°)	-20°	(-28°)
	NBR	Buna-N	212°	(100°)	-40°	(-40°)
	SST/TFE	301/302 SST U-cup / TFE	400°	(205°)	-325°	(-198°)
Dynamic Seals	"CW" – EPR/TFE	TFE Cap Seal, EPR O-ring, GF-TFE Wiper	300°	(148°)	-40°	(-40°)
	"CW" – NBR/TFE	TFE Cap Seal, NBR O-ring, GF-TFE Wiper	212°	(100°)	-40°	(-40°)
	"CW" – FK/TFE	TFE Cap Seal, FK O-ring, GF-TFE Wiper	350°	(177°)	-40°	(-40°)
	"CW" – FKM/TFE	TFE Cap Seal, FKM O-ring, GF-TFE Wiper	400°	(205°)	-20°	(-28°)
	SST/TFE	301/302 SST U-cup / TFE	400°	(205°)	-325°	(-198°)

ABBREVIATIONS			
FK = Fluorosilicone	NBR = Buna-N	PTFE = Polytetrafluoroethylene	BC = Neoprene
FKM = Fluorocarbon Elastomer	V-TFE = Virgin TFE	GF-TFE = Glass-fill TFE	ELG = Elgiloy
EPR = Ethylene Propylene	CTFE = Chlorotrifluoroethylene TFE		

TABLE 6
MAXIMUM DIAPHRAGM RATING psig (Barg) *

NOTE: The below ratings may be further "derated" by limitations through the Pressure Equipment Directive (2014/68/EU).

Diaphragm Material	BODY SIZE 1/2"-2" (DN15-50)	BODY SIZE 2-1/2"-4" (DN65-100)
	STD DIAPHRAGM CONSTRUCTION	STD DIAPHRAGM CONSTRUCTION
BC, EPR	1250 (86.1)	800 (55.1)
NBR	450 (31.0)	300 (20.6)
FKM, FKM+TFE, FK	700 (48.2)	550 (37.9)

* Maximum pressure setpoint of Pressure Safety Valve or Rupture disk should not exceed 1.5 times tabulated value to prevent irreversible diaphragm mechanical damage or rupture.

TABLE 7
REDUCER MAXIMUM CAPACITY WITH PLUG WIDE-OPEN

Body Size		Full Port Max Capacity	
in	(DN)	Cv	Kv
1/2"	(15)	4.0	3.4
3/4"	(20)	8.0	6.9
1"	(25)	15	13
1-1/4"	(32)	23	20
1-1/2"	(40)	30	26
2"	(50)	60	52
2-1/2"	(65)	90	78
3"	(80)	120	104
4"	(100)	220	190
NOTE: The above Cv factors may be used for sizing of safety relief valves or rupture discs.			

TABLE 8
PRESSURE LOADING SYSTEMS
MAXIMUM CONTAINMENT PRESSURE PROCESS OR AUXILIARY GASES

TUBE	FITTINGS	PRESSURE		vs. TEMPERATURE	
		psig	(Barg)	°F	(°C)
CU*	BR	1400	(96.5)	-325 to +100	(-198 to +37.7)
		1140	(78.6)	200	(93.3)
		1100	(75.8)	300	(148.8)
		700	(48.2)	400	(204.4)
SST^	SST	3600	(248.2)	-325 to +400	(-198 to +204.4)

*1/4" O.D. X 0.030" Wall Thickness
^1/4" O.D. X 0.028" Wall Thickness
Application **Notes:**

1. Consult Factory for T1<0º F.
2. Use Heat Exchange "coils" when loading fluid (process, auxiliary) T1>140ºF
3. Use Heat Exchange "coils" when T1<0ºF
4. Other components of a given loading or piloting system may have lower limits of pressure or temperature than the tubing &and fittings.

TABLE 9
LOWER PISTON SPRING RANGES

Lower Piston Spring Range psig	Application Notes
N/A	All Unloader Range Springs
1–2	Required when Unloader Range Spring is 2 - 30 psig
2–5	For Unloader Range Springs 10 - 360 psig

NOTES:

1. The 2–5 psig lower piston spring is –
   - most commonly selected,
   - recommended for GF-TFE and CTFE seats,
   - recommended for tighter shutoff; i.e. lowest inboard leakage.
2. Lower spring material matches main metallic trim in corrosion resistance.

TABLE 10
INBOARD LEAKAGE RATINGS *
Per ANSI/FCI 70-2

Seat Material	Dynamic Seal	
	O-Ring	Dynamic Seals Except O-Ring
CTFE, GF-TFE, and V-TFE	IV	IV
BC, NBR, PolyAll	VI	IV

*Inboard leak rates are the composite leakage of the seat leakage + dynamic seal
leakage, considered as a single inboard leakage value.

TABLE 11
REDUCER RECOMMENDED VELOCITY LIMITS

Application Fluid	Valve		Valve Body Outlet		Downstream Pipe		Units
	Type	Size Range	Recommend	Max.	Recommend	Max.	
Gas	PRV	1/2"–1" 1-1/4"–2"	0.20 0.25	0.40 0.45	0.15 0.20	0.30 0.30	Mach #
		2-1/2"–6"	0.30	0.50	0.25	0.35	
		8"–12"	–	–	0.25	0.40	

NOTES:
1. If valve outlet exceeds recommended limits, then can use external sensing to reach maximum limits.
2. On gas service, a pilot operated prv can work with a outlet Mach = 0.75.

TABLE 12
MAXIMUM RECOMMENDED NOISE LIMITS *

Criteria	Body Sizes		Noise Level - dBA
	in	(DN)	
Per OSHA Regs. w/noise attenuation methods incorporated.	All	All	85-95
Sch. 80 pipe, no insulation.	1/2"–2"	(15-50)	95
Std. wt. pipe, no insulation.	2-1/2"–4"	(65-100)	98

* Consult Factory for ALL applications exceeding 97 dBA noise prediction.

Schemes To Reduce High Noise –

- Staging – using two separate throttling valves in series.
- dB Plates – using 1, 2 or 3-stage dB Plate cartridges downstream of a throttling valve.
- Paralleling – using two separate throttling valves in parallel.
- Combinations – using multiple methods of above three possibilities.

TABLE 13
RECOMMENDED INTERNAL MATERIALS
For P_{max}, Reference Individual Technical Bulletins

	GASES			
	Fluid	**Tmax °F**	**Tmin °F**	**Trim**
Atmospheric Gases	**Atmospheric Gases –** O_2 (GOX)	225°	-60°	M7
		350°	-65°	M9
	N_2 (GN_2), Air, Argon	180°	-60°	P2
		350°	-65°	P8
	CO_2 (dry)	180°	-40°	P6
	CO_2 (wet)	180°	-40°	P5

SUPPLEMENT for TABLE 13
CHEMICAL RESISTANCE

General Statement: Statements located within this technical bulletin concerning suitability of fluids with TFE materials are general statements, and should not be construed as recommendations. Any statements of suitability are the result of a compilation of various sources of information based on experience, tests, and published technical literature. No guarantee or warranty is in anyway implied for a given particular service or application.

Additional Reference: For an inclusive listing covering a broader range of service application fluids, reference “Handbook of Corrosion Resistant Piping”, P.A. Schweitzer, Industrial Press; or “Compass Corrosion Guide”, 2nd Edition, K.M. Pruett, Compass Publications. This publication will include information based on the following fluid variables:

1. Solution concentration
2. Pressure
3. Temperature

Inverse Sympathetic Ratio (ISR) - effect on regulator performance.

ULR-1 regulators utilize a top and bottom guide, "flow to open" trim design. The top guide also acts as a "balancing" piston to oppose the forces generated by the inlet pressure acting on the valve plug. A small residual imbalance between the piston and the valve plug helps to reduce seat leakage at high differential pressures across the seat joint. This same imbalance produces and Inverse Sympathetic Ratio, ISR effect, as the delta pressure across the seat (DP) changes. The magnitude of the ISR effect is given in Table -14.

TABLE 14

Body Size		ULR-1
in	(DN)	
1/2", 3/4", 1"	(15,20,25)	0.03
1-1/4", 1-1/2"	(32,40)	0.04
2"	(50)	0.02
2-1/2", 3", 4"	(65,80, 100)	0.054

In a similar manner the ISR effect will produce an offset between the loading pressure, PL, and the pressure setpoint of a dome loaded regulator. For example, a 4" ULR-1 with an inlet pressure, P1 of 300 psig and an outlet pressure, P2 of 50 psig would require a loading pressure, PL = (P1 - P2) x ISR +P2) = (300-50) x 0.054 + 50 = 63.5 psig. In addition, if the DP changes, then a setpoint offset would be observed with a constant loading pressure.

FIGURE F1
Dynamic - Static Seals

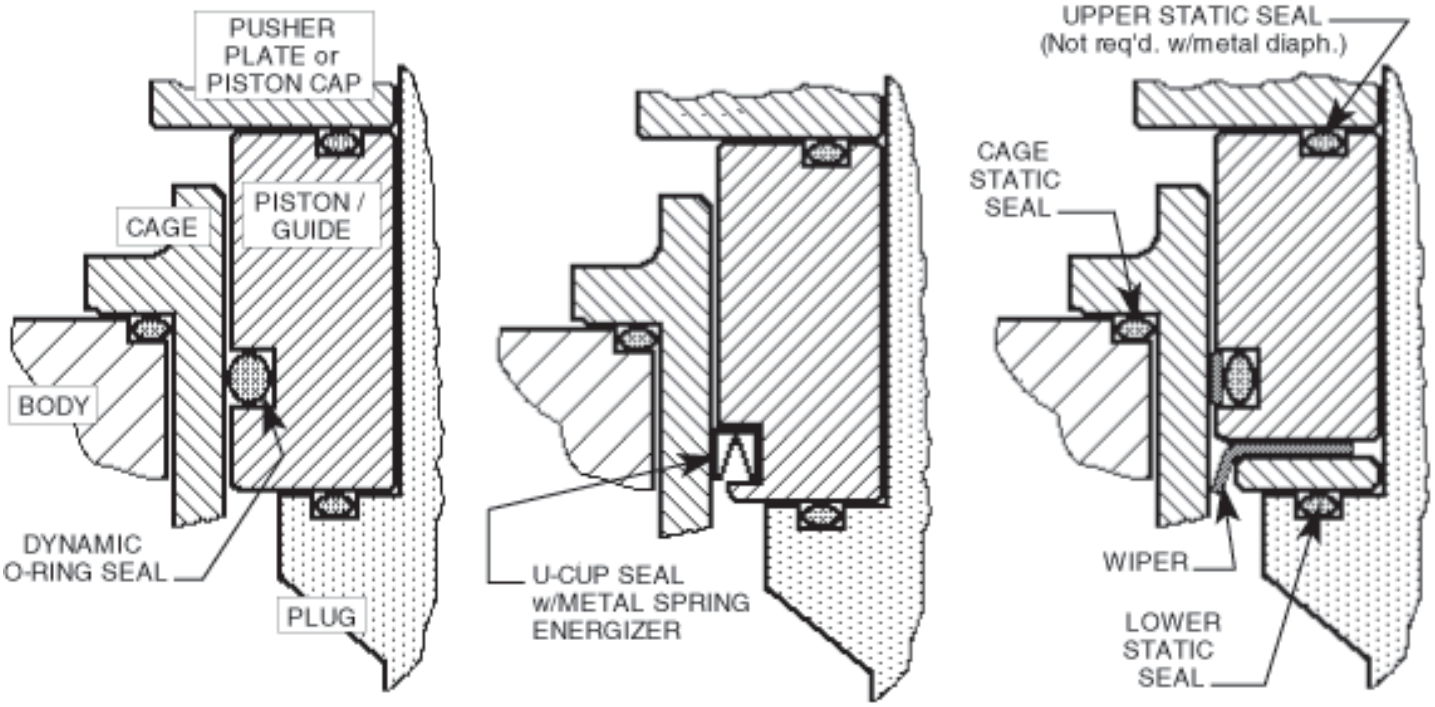

O-RING DYNAMIC SEAL

U-CUP DYNAMIC SEAL

TFE CAP DYNAMIC SEAL + WIPER

FIGURE F2
Location of BODY TAPS

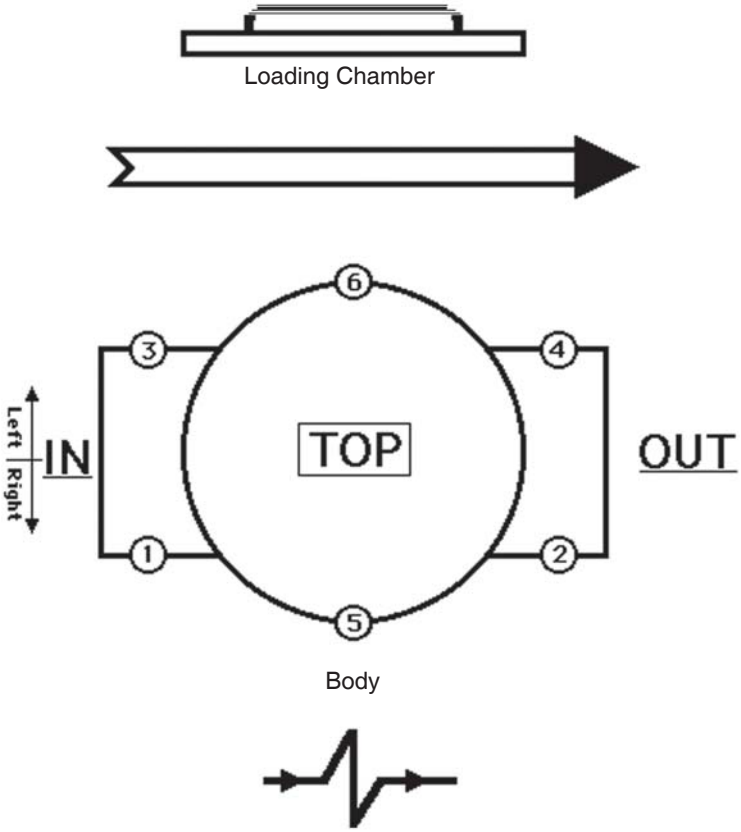

Flow To Open Direction

Location	Description	Opt. No.	NPT - Size	Body Mat'l.
1 & 2	Inlet & Outlet – Right	STD	1/4"	DI, CS & SST
1, 2 & 3	Inlet & Outlet – Right	STD	1/4"	BRZ
5	External Sensing – Right	STD	1/4"	DI, BRZ, CS & SST
1, 2, 3 & 4	Inlet & Outlet – Right Inlet & Outlet – Left	85	1/4"	DI, BRZ, CS & SST
5 & 6	Double External Sensing	85	1/4"	DI, BRZ, CS & SST

DIMENSION and WEIGHTS

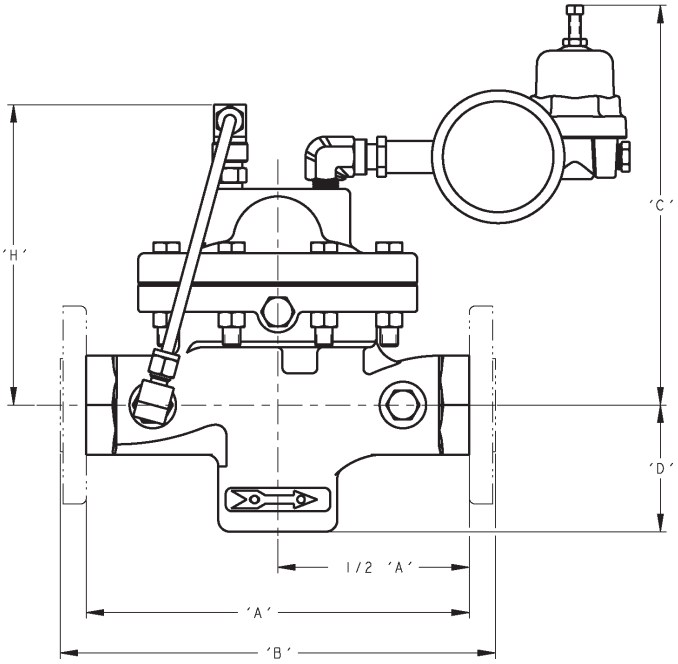

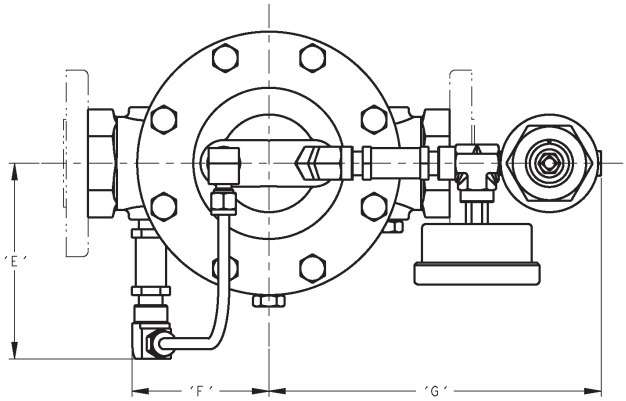

ENGLISH UNITS (in) (lbs)

DIMEN.	END CONN.	BODY MAT'L	BODY SIZE 1/2", 3/4 & 1"	1-1/4" & 1-1/2"	2"	2-1/2"	3"	4"
A	NPT	DI, BRZ	6.00	9.88	9.88	–	–	–
		CS, SST	8.25	9.88	9.75	–	–	–
B	125# FF	DI	–	–	–	10.88	11.75	13.88
	250# RF	DI	–	–	–	11.50	12.50	14.50
	150# FF	BRZ **	9.63	11.50 √	11.50	10.88	11.75	13.88
	300# FF	BRZ **	9.63	11.50 √	11.50	11.50	12.15	14.50
	150# RF	CS, SST	10.75	12.38 √	10.00	10.88	11.75	13.88
	150# RF ‡	CS, SST	14.00	14.00 √	14.00	–	–	–
	300# RF	CS, SST	10.75	12.38 √	10.50	11.50	12.50	14.50
	300# RF ‡	CS, SST	14.00	14.00 √	14.00	–	–	–
	600# RF	CS, SST	10.75	12.38 √	11.25	12.25	13.25	15.50
	600# RF ‡	CS, SST	14.00	14.00 √	14.00	–	–	–
C	ALL	ALL	8.75	10.63	11.25	13.00	14.50	14.50
D	ALL	ALL	2.84	3.69	4.00	5.25	5.75	7.00
E	ALL	ALL	4.50	4.75	5.13	6.25	6.63	6.63
F	ALL	ALL	2.25	3.50	3.75	3.75	4.25	4.25
G	ALL	ALL	7.75	8.00	8.00	6.81	6.75	6.75
H	ALL	ALL	6.50	7.25	8.00	9.50	11.00	11.00
WEIGHT	wo/ Flanges	ALL	23	32	48	–	–	–
	w/ Flanges	ALL	28	42	61	90	155	164

METRIC UNITS (mm) (kg)

END CONN.	BODY SIZE DN15, DN20 & DN25	DN32 & DN40 √	DN50	DN65	DN80	DN100
NPT	152	251	251	–	–	–
	209	251	248	–	–	–
125# FF	–	–	–	276	298	352
250# RF	–	–	–	292	318	368
150# FF	246	292 √	292	276	298	352
300# FF	246	292 √	292	292	309	368
150# RF	273	314 √	254	276	298	352
150# RF ‡	356	356 √	356	–	–	–
300# RF	273	314 √	267	292	318	368
300# RF ‡	356	356 √	356	–	–	–
600# RF	273	314 √	286	311	336	394
600# RF ‡	356	356 √	356	–	–	–
ALL	222	270	286	330	368	368
ALL	72	94	102	133	146	178
ALL	114	121	130	159	168	168
ALL	57	89	95	95	108	108
ALL	197	203	203	173	171	171
ALL	165	184	203	241	279	279
wo/ Flanges	10	14	22	–	–	–
w/ Flanges	12	19	28	41	70	74

** Flanged BRZ bodies available in sizes 1", 1-1/2", 2", 2-1/2", 3", & 4" ONLY.
√ Flange Connection not available for 1-1/4" size.
‡ Opt-34: Special 14" F to F Flange dimensions, CS and SST body material only.
Consult Factory for dimensions of ISO DIN Flanged units. (PN16, PN25, PN40)

The contents of this publication are presented for informational purposes only, and while every effort has been made to ensure their accuracy, they are not to be construed as warranties or guarantees, express or implied, regarding the products or services described herein or their use or applicability. We reserve the right to modify or improve the designs or specifications of such product at any time without notice.
Cashco, Inc. does not assume responsibility for the selection, use or maintenance of any product. Responsibility for proper selection, use and maintenance of any Cashco, Inc. product remains solely with the purchaser.

MODEL ULR-1 PRODUCT CODER 09/14/17

An "X" in POS 12 followed by a 5-digit control number overrides remaining selections.

UL	POS 3	—	POS 5	POS 6 & 7	POS 8	—	POS 10	POS 11	POS 12	POS 13	POS 14	POS 15	POS 16	POS 17	A

POSITION 3 - SIZES		
Size		STD
in	(DN)	CODE
1/2"	(15)	4
3/4"	(20)	5
1"	(25)	6
1-1/4"	(32)	7
1-1/2"	(40)	8
2"	(50)	9
2-1/2"	(65)	A
3"	(80)	B
4"	(100)	C

POSITION 5 - BODY/COVER DOME MATERIALS			
Materials	CODE	Materials	CODE
DI/DI	1	LCC/LCC	6
BRZ/DI	2	LCC/SST	8
BRZ/BRZ	B	SST/DI	7
CS/DI	4	SST/CS	9
CS/CS	5	SST/SST	A

POSITION 6 & 7 - DIAPHRAGM, SEAL & SEAT MATERIALS					
Trim	Seat (#)	Diaphragm	Static Seal	Dynamic Seal	CODE
17-4PH SST "P"	PA	BC	NBR	O-ring	P1
	PA / (BC)	BC	NBR	SST/TFE u-cup	P2 / (PU)
	CTFE	BC	NBR	SST/TFE u-cup	P3
	PA	EPR	EPR	O-ring	P4
	PA	NBR	NBR	O-ring	P5
	PA/ (NBR)	NBR	NBR	SST/TFE u-cup	P6 / (PW)
	PA	FK	FK	SST/TFE u-cup	P7 ‡
	GF-TFE	FK	FK	SST/TFE u-cup	P8 ‡
	V-TFE	FK	FK	SST/TFE u-cup	P9 ‡
	PA	FKM	FKM	O-ring	PA
	PA	FKM	FKM	SST/TFE u-cup	PB
	GF-TFE	FKM	FKM	O-ring	PC
	GF-TFE	FKM	FKM	SST/TFE u-cup	PD
	V-TFE	FKM + TFE	SST/TFE u-cup √	SST/TFE u-cup	PE
	PA / (NBR)	NBR	NBR	TFE+NBR GFTFE CW	PH / (PY)
	PA	EPR	EPR	TFE+EPR GFTFE CW	PJ
	PA	FK	FK	TFE+FK GFTFE CW	PK
	GF-TFE	FKM	FKM	TFE+FKM GFTFE CW	PL
Monel "M"	PA	FK	FK	SST/TFE u-cup ‡‡	M7 ‡
	V-TFE	FK	FK	SST/TFE u-cup	M9 ‡
	V-TFE	FKM-TFE	SST/TFE u-cup √	SST/TFE u-cup	ME
	PA / (NBR)	NBR	NBR	TFE+NBR GFTFE CW	MH / (MY)
	PA	EPR	EPR	TFE+EPR GFTFE CW	MJ
	PA	FK	FK	TFE+FK GFTFE CW	MK
	GF-TFE	FKM	FKM	TFE+FKM GFTFE CW	ML
316L SST "S"	PA	FK	FK	SST/TFE u-cup	S7 ‡
	V-TFE	FK	FK	SST/TFE u-cup	S9 ‡
	PA / (NBR)	NBR	NBR	TFE+NBR GFTFE CW	SH / (SY)
	PA	EPR	EPR	TFE+EPR GFTFE CW	SJ
	PA	FK	FK	TFE+FK GFTFE CW	SK
	GF-TFE	FKM	FKM	TFE+FKM GFTFE CW	SL
	NBR	NBR	NBR	SST/TFE u-cup	SW
17-4PH/ Monel/ 17-4PH "T"	PA	FK	FK	SST/TFE u-cup ‡‡	T7 ‡
	V-TFE	FK	FK	SST/TFE u-cup	T9 ‡
	PA / (NBR)	NBR	NBR	TFE+NBR GFTFE CW	TH / (TY)
	PA	EPR	EPR	TFE+EPR GFTFE CW	TJ
	PA	FK	FK	TFE+FK GFTFE CW	TK
	GF-TFE	FKM	FKM	TFE+FKM GFTFE CW	TL

‡‡ For GOX service, PA seats allowed in BRZ Bodies w/ trim materials "M" or "T" only.
‡ For Low Ambient Temperatures (See TABLE 5 & 13 for Min. Temperatures).
√ Sizes 2-1/2"-4" use V-TFE static seal.
(#) BC and NBR Seat material not available for 2-1/2" size.

POSITION 8 - Product Classification Under European"Pressure Equipment Directive"		
PRODUCT DESTINATION	HAZARD CATEGORY	CODE
Anywhere except Europe	N/A	7
European Countries * (CE Mark does not apply to DN25 and below)	Sound Engineering Practice (SEP)	S
	CE Marked Hazard Cat I or II	E
	ATEX	A

* For products to be placed in service in Europe - Ref to Directive 2014/68/EU. Forward Completed "EU" Application Recorder prior to quotation. (Without Recorder-Processing of Purchase Order will be delayed). Contact Cashco for Assistance.

POSITION 10 - END CONNECTIONS / ASME								
Size	Material	Method	End Conn	CODE	End Conn	CODE	End Conn	CODE
1/2" - 2"	ALL	–	NPT	1	–	–	–	–
2-1/2" - 4"	DI	Integral	125#FF	2	250#RF	3	–	–
1", 1-1/2" - 4"	BRZ	Integral	150#FF	6	300#FF	7	–	–
1/2" - 3/4"	CS,SST	Opt-30	150#RF	4	300#RF	5	600# RF **	8
1" - 4"	CS-SST	Integral *						
1/2" - 2"	ALL	Opt-31	BSP	P	–	–	–	–
1/2" - 2" (14" F to F)	CS, SST	Opt-34 *	150#RF	V	300#RF	W	600#RF	Y
END CONNECTIONS FOR ISO DIN FLANGES								
DN15-25, 40, 50	BRZ	Integral	PN40 FF - will mate with PN16, 25 and 40					J
DN65-100			PN16 FF	K	PN25 FF	L	PN40 FF	M
DN15-25, 40, 50	CS, SST	Opt-30	PN40 RF - will mate with PN16, 25 and 40					D
DN65-100	CS, SST	Integral	PN16 RF	A	PN25 RF	C	PN40 RF	G

* Flanges Not Available for 1-1/4" (DN32) size.
** 1" size w/ 600# RF CS,or SST has weld-on flanges Opt-30

POSITION 11 - LOWER SPRING	
Spring Range psig	CODE
No Spring	0
2-5	3
1-2 *	5

* Use with Unloader Spring Range 2 - 30 psig.

POSITION 12 - SENSING CONFIGURATION (FLOW TO OPEN)	
Option	CODE
Internal	1
External	2
For Special Construction Contact Cashco for Special Code	X

POSITION 13 - UNLOADER 1/4" NPT, S2 TRIM		
Spring Range psig	Body / Spring Chamber Material	
	BRZ	SST
2 - 30	B	2
10 - 50	C	3
40 - 90	D	4
40 - 125	E	5
100 - 175	F	6
170 - 400	G	7

POSITION 14 - FILTER-ORIFICE / FITTING / TUBING		
Filter - Orifice / Fitting / Tubing Material	W / Helix Coils *	CODE
Brass / BR / Cu with BRZ Unloader	Yes	A
	STD -No	B
SST / SST / SST with SST Unloader	Yes	R
	STD-No	S
Optional Brass / SST / SST Tubing over Brass/ BR/ Cu tubing above on Brass UnLoader	Yes	G
	No	H

* See Application Notes on page 11 Table 8.

POSITION 15 - BODY OPTIONS	Option	CODE
No Option	–	0
Second "Set" of 1/4" (DN8) FNPT Pressure Taps & Plugs	-85	T

POSITION 16 - CERTIFICATE OPTIONS	Option	CODE
No Option	–	0
SPECIAL CLEANING: Per Spec #S-1134. W/ properly selected mat'ls, Suitable for Oxygen Service. BRZ or SST body material.	-55	M
SPECIAL CLEANING: Per Cashco Spec #S-1542.	-56	N

POSITION 17 - PAINT OPTIONS	Option	CODE
No Option	–	0
Epoxy Painted Per Cashco Spec #S-1547.	-95	W
Epoxy Painted Per Cashco Spec #S-1687 OFFSHORE Applic.	-95OS	Y

Cashco, Inc.
P.O. Box 6
Ellsworth, KS 67439-0006
PH (785) 472-4461
Fax. # (785) 472-3539
www.cashco.com
email: sales@cashco.com

Cashco GmbH
Handwerkerstrasse 15
15366 Hoppegarten, Germany
PH +49 3342 30968 0
Fax. No. +49 3342 30968 29
www.cashco.com
email: germany@cashco.com

Cashco do Brasil, Ltda.
Al.Venus, 340
Indaiatuba - Sao Paulo, Brazil
PH +55 11 99677 7177
Fax. No.
www.cashco.com
email: brazil@cashco.com

Printed in U.S.A. ULR-1-TB