PREMIER EZO AND PREMIER BODY ASSEMBLIES

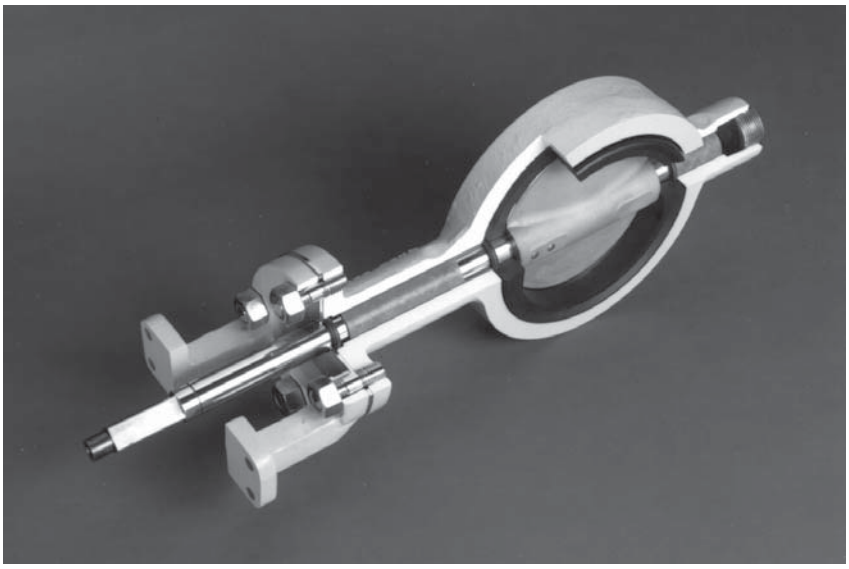

INDEX

PREMIER EZO ELASTOMER LINED

Standard construction includes 3", 4", 6", 8" and 10" sizes. ANSI 125# or 150# and 300# bodies. In cast iron, cast steel or 316 SST. The disc of 316 SST is fastened to the 17-4PH SST stem with two taper pins. Flow direction is two-way. Seat leakage meets ANSI B16.104, Class VI. Liners and O-rings are Buna-N or EPDM. Working temperatures are 10° to 180°F for Buna-N and -30° to +250°F for EPDM. Maximum pressure drop is 150 psid in the closed position.

PREMIER UNLINED

The Premier is available without a liner in the same body materials and sizes as the Premier EZO, and provides shutoff to within 1% of the rated Cv. In the unlined version it is suitable for temperatures up to 500°F, and mates with ANSI 125# flat faced flanges and 150# or 300# raised face flanges. Stem sealing is provided by TFE asbestos packing with a packing follower, bushing and flange. Maximum pressure drops up to 300 psig. Stem bearing is 316 SST with TFE bore and the thrust bearing is TFE. Other materials are similar to those in the Premier EZO.

SECTION I

I. DESCRIPTION

This manual covers the body sub-assembly of the Cashco Premier and Premier EZO butterfly valves. Instructions for the pneumatic operated spring opposed diaphragm actuator, positioner and other accessories are included in IOM-48 or IOM-148.

The Cashco Premier EZO is an elastomer lined butterfly valve designed for throttling with a special liner that permits easy opening and eliminates most of the "pop open" flow surge common to most soft seat butterfly valves.

The Cashco Premier is an unlined butterfly valve designed for throttling and provides shut-off to within 1% of the rated Cv. The Premier (unlined) is suitable for temperatures up to 500°F.

SECTION II

II. INSTALLATION

A. General Guidelines:

1. It is recommended that the valve be mounted in the piping with the diaphragm actuator pointing up and with the valve body stem horizontal.
2. Clean the piping of all foreign material such as chips, scale, oil, grease and dirt, before installing the valve.
3. Working temperatures and working pressures for the Premier EZO and Premier are in Bulletin "Premier-TB".
4. Face-to-face dimensions are per MSS SP67.
5. Flow direction through the valve is two-way.
6. Line bolting material must comply with ANSI B16.34 and be compatible with the intended service.

B. Flangeless Body Installation:

The Premier EZO elastomer lined valve body is flangeless. Install between ANSI Class 150# and 300# raised face **weld neck** flanges, or their I.S.O. equivalent (PN 20 or 50). ***Do not use flange gaskets.***

The Premier unlined valve body is flangeless. Install between ANSI Class 125# flat face flanges and 150# or 300# raised face flanges. Use flange gaskets.

1. Alignment:

   a. When installing in a horizontal line, insert the lower flange studs between the flanges first. This will support the valve while installing the rest of the studs. On a vertical line, the valve will be supported by the lower flange.

   b. The flanges must be parallel, in line and pulled up evenly against the valve's flange faces. Do not allow the valve to "cock" between the flanges.

NOTE: *The valve must be centered on the flanges so the disc can fully open without contacting the flange or pipe bore.*

2. Disc Position for Installation:

   When installing the valve between flanges, the disc must be in the closed position.

⚠ CAUTION

ALL FAIL OPEN, air to close valves are shipped from the factory in the closed position. Valves not equipped with the handwheel assembly are mechanically held in the closed position. A slotted ("C") washer is positioned on the push rod (10) between the lower case and the upper jam nut (43). See IOM-48 or IOM-148. It mechanically holds the valve closed. After installing the valve in the piping, remove the machine screws (36) and cover plate (20). Load the actuator to the recommended supply pressure and remove the slotted ("C") washer. Depressurize the actuator and check for full valve travel. Reassemble nameplate and screws.

NOTE: *Save the slotted ("C") washer and use when removing the valve from the piping. Reverse the procedures outlined in the proceeding caution.*

3. Packing:

   On the Premier (unlined) valve, be sure the packing flange nuts (22) haven't worked loose during shipment. Hand tighten the nuts when process pressure is applied to the valve. Tighten the nuts enough to stop leakage. **Do not over tighten.**

4. Insulation:

   When installing insulation, insulate the valve body only. **Do not** insulate the integral extension bonnet as this could result in packing failure.

SECTION III

III. MAINTENANCE

A. General:

Cross sectional drawings with item numbers are included at the end of this manual.

For normal maintenance the Premier EZO and Premier can be disassembled and reassembled using standard shop tools.

B. Premier EZO Lined Valve Disassembly:

Refer to Premier EZO Assembly Dwg. for callouts used in the following steps.

1. Remove the complete valve assembly from the process piping.

NOTE: *Close the disc before attempting to remove the valve from the piping. On ALL FAIL OPEN valves, refer to Installation, Section II-B2 for instructions on how the factory mechanically holds the valve closed. If the actuator has been removed from the body, rotate the stem/ disc to close the valve. Confirm the position of the disc with the "V" groove mark on the actuator end of the stem. The "V" groove is parallel to the face of the disc.*

2. Disconnect the valve from the actuator/arm housing. Refer to Actuator Maintenance Manual IOM-48 or IOM-148, Section V.

3. Remove the four cap screws (19) on 3" and 4" valves, or four nuts (22) on 6", 8" and 10" valves.

4. Pull the yoke (12) and packing flange (5) off over the end of the stem. Remove O-ring (11) from extension bonnet.

5. Remove the taper pins (3.3). Grind off the smaller end of the pins flush with the disc surface. With a flat faced punch, drive out the taper pins (3.3).

⚠ CAUTION

When driving the taper pins out, support the disc (3.1) to prevent damage to the main bearings (7, 8 & 9).

6. Remove the stem and disc (3.2 & 3.1). Twist the stem (3.2) and pull out the bonnet end.

⚠ CAUTION

The disc may drop out of the liner. Be careful not to damage the disc edge.

7. Press the liner (10) out of the body and remove O-rings (6) from the liner.

8. Remove the pipe plug (2) from the end of the body (1).

9. It is seldom necessary to replace the bearings (7, 8 and 9). If visual inspection of the stem (3.2) reveals excessive wear marks and/or deterioration, remove the bearings with the bearing ram. See Figure 1. Insert the bearing ram in the bonnet and press the main bearing(s) (7 & 8) out. Remove the ram and insert it through the pipe plug end of the body (1) and press main bearing (9) out.

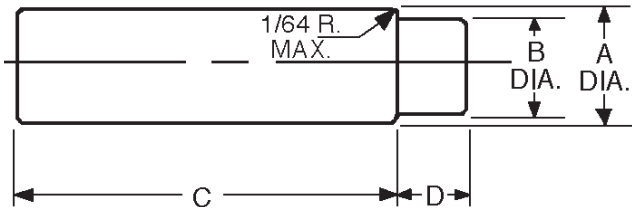

Valve Size	A-Diam.	B-Diam.	C-Diam.	D-Diam.
3" & 4"	0.672 to 0.682	0.610 to 0.620	1.188 Min.	0.375 Min.
6", 8" & 10"	1.075 to 1.085	0.985 to 0.995	4.000 Min.	0.375 Min.

FIGURE 1
Bearing Ram

C. Installing the Main Bearings - Premier EZO:

1. Disassemble the valve in accordance with Section III-B.

2. Press the main bearing(s) (8,7) respectively, in the bonnet of the body and press the main bearing (9) in through the pipe plug end of the body.

NOTE: *The bearings must not protrude into the flow passage I.D. of the body as they will interfere with the liner.*

3. Install the O-rings (6) and liner (10) in accordance with Section III-D.

D. Installing O-rings and Liner - Premier EZO 3" and 4" valves: (For 6" through 10" valves see D.8.)

1. Inspect and clean all parts. Always use new O-rings (6).

NOTE: *Position liner (10) such that the material code mark on the liner is located at the pipe plug end of the body (1). The specified location of the material code mark properly orients the step seat in the body (1). When viewed from the actuator end of the stem (3.2), clockwise rotation of the stem/disc closes the valve. Align the stem holes in the liner (10) with the holes in the body (1). Insert the stem (3.2) to ensure proper alignment.*

Code Mark	Liner Material
"N"	Buna-N
"E"	EPDM

2. Press the liner (10) into the body.

3. To install O-rings (6) in the liner, insert the stem (3.2) in the pipe plug (2) end of the body (1) flush with the O-ring groove.

NOTE: *The stem (3.2) serves as the assembly stop for the O-ring (6) and ensures proper alignment of O-ring (6).*

4. Apply lubricant sparingly (silicone grease or equivalent) to the O-ring (6) and insert from bore of liner (10). Press O-ring (6) into the O-ring groove.

5. Remove the stem (3.2) from the plug end of the body (1) and insert in bonnet, flush with the O-ring groove.

6. Repeat Step 4.

7. Proceed to Section III-E.

8. **6", 8" and 10" Valves:**

   Inspect and clean all parts. Always use new O-rings (6).

9. Apply lubricant sparingly (silicone grease or equivalent) to O-rings (6). Press O-rings (6) into the grooves.

NOTE: *Position the liner (10) such that the material code mark on the liner is located at the pipe plug (2) end of the body (1). The specified location of the material code mark properly orients the step seat in the liner. When viewed from the actuator end of the stem (3.2), clockwise rotation of the stem/disc closes the valve. Align the stem holes in the liner (10) with the holes in the body (1). Insert the stem (3.2) to ensure proper alignment.*

Code Mark	Liner Material
"N"	Buna-N
"E"	EPDM

10. Press the liner (10) into the body.

11. Proceed to Section III-E.

E. Stem/Disc Reassembly:

NOTE: *On factory supplied stem-disc kits the holes for the taper pins (3.3) are a matched set. Do not interchange with other components.*

1. Clean the pin holes in the stem (3.2) and disc (3.1) of all dirt, burrs, old Loctite [1], etc.

2. Place the disc (3.1) in the liner (10) (taper pin holes at actuator end). Insert the stem (3.2) through the body (1), liner (10) and disc (3.1), and align pin holes in the stem (3.2) and disc (3.1).

NOTE: *Align the punch mark on the disc (3.1) (near taper pin holes) with the punch mark on the end of the square section of the stem (3.2). The punch mark denotes the side to insert the taper pins (3.3).*

3. Spray Primer "T" [2], or equivalent, in pin holes. Let dry five minutes. Apply Loctite 601 in pin holes. Drive pins (3.3) into the holes with a hammer.

⚠ CAUTION

Support the disc (3.2) to prevent damage to the stem (3.1) or bearings (7,8 & 9).

TAPER PIN DETAILS FOR PREMIER VALVES

Valve Size (Inches)	Shaft Diameter (Inches)	American Std. Taper Pin Size	Drill Size (Inches)
3" & 4"	5/8"	2	18(0.1695")
6" thru 10"	1"	6	15/64"

NOTE: *Always use new taper pins (3.3).*

4. Reassemble the valve following Steps 1 through 4, in reverse order, in Section III-B.

5. Replace the pipe plug (2).

F. Premier Unlined Valve Disassembly:

Refer to Premier Unlined Assembly Dwg. for callouts used in the following steps.

1. Remove the complete valve assembly from the process piping.

NOTE: *Close the disc (3.1) before attempting to remove the valve from the piping. On ALL FAIL OPEN valves, refer to Installation, Section II-B2 for instructions on how the factory mechanically holds the valve closed. If the actuator has been disconnected from the body, rotate the stem/disc to close the valve. Confirm the position of the disc with the "V" groove mark on actuator end of the stem. The "V" groove is parallel to the face of the disc.*

2. Disconnect the valve from the actuator/arm housing. Refer to the Actuator Maintenance Manual IOM-48 or IOM-148, Section V.

3. Remove two packing flange stud nuts (22)

[1] Loctite - Trade name of Loctite Corp., Newington, CT
[2] Primer "T" – Trade name of Lotite Corp., Newington, CT

and two cap screws (19), on 3" and 4" valves, or four nuts (22), on 6", 8" and 10" valves.

4. Pull the yoke (12), packing flange (5), packing follower (16) and follower bushing (17) off over the end of the stem (3.2).

5. Remove packing (13). Locate the cut in split rings and peel packing out.

NOTE: *A set of packing consists of five rings.*

6. Remove the taper pins (3.3). Grind off the smaller end of the pins flush with the disc (3.1) surface. With a flat faced punch drive out the taper pins (3.3).

⚠ CAUTION

When driving the taper pins out (3.3), support the disc (3.2) to prevent damage to the main bearings (7).

7. Remove the stem (3.2), end thrust bearing (14) and disc (3.1). Twist the stem (3.2) and pull out the bonnet end.

⚠ CAUTION

The disc (3.1) will drop out of the body (1). Be careful not to damage the stem (3.2) bearing surface of disc edge.

8. Remove the upper sleeve (15).

9. Remove the pipe plug (2).

10. It is seldom necessary to replace the main bearings (7). If visual inspection of the stem (3.2) reveals excessive wear and/or deterioration, remove bearings (7) with the bearing ram. See Figure 1. Insert the ram from the body bore and with a long punch drive bearing(s) out through the bonnet. Remove the ram, insert it in the bearing at the pipe plug (2) end from within the body (1) bore and drive the bearing out.

G. Replacing Main Bearings:

1. Disassemble the valve in accordance with Section III-F, Steps 1 through 10. Clean the bearing zones so new bearings can be installed without distortion or damage.

2. Press the main bearing(s) (7) into the bonnet end of the body (1), all the way to the lip. Use the bearing ram of Figure III-B1. One bearing in 3" and 4", two bearings in 6"-10".

NOTE: *The body stem bore is machined with two lips to prevent main bearings from protruding into the flow passage of the body.*

3. Press one main bearing (7) into the pipe plug (2) end of the body (1), all the way to the lip.

4. Install the upper sleeve (15).

5. Proceed to Section III-H.

H. Stem/Disc Reassembly:

NOTE: *On factory supplied stem-disc kits the holes for the taper pins are a matched set. Do not interchange with other components.*

1. Clean the pin holes in the stem (3.2) and disc (3.1) of all dirt, burrs, old Loctite, etc.

2. Place the disc (3.1) in the body (1) (taper pin holes at actuator end). Insert the stem (3.2) through the body (1), end thrust bearing (14) and disc (3.1), and align the pin holes in stem (3.2) and disc (3.1).

NOTE: *Align the punch mark on the disc (3.1) (near taper pin holes) with the punch mark on the end of the square section of the stem (3.2). The punch mark denotes the side to insert the taper pins (3.3).*

3. Always use new taper pins (3.3). See TAPER PIN DETAILS in Section III-E, step 3. Spray Primer “T”, or equivalent, in pin holes. Let dry five minutes. Apply Loctite 601 in pin holes. Drive the pins (3.3) into the holes with a hammer.

⚠ CAUTION

Support the disc (3.1) to prevent damage to the stem (3.2) and bearings (7).

4. Proceed to Section III-J, steps 6, 7 and 8.

J. Replacing Packing on Premier:

COMPLETE VALVE with Actuator mounted on Body Assembly.

⚠ CAUTION

The valve must be isolated from the process and vented before attempting further disassembly.

2. Remove packing flange nuts (22).

3. Slide the packing flange (5), packing follower (16) and follower bushing (17) away from the stuffing box.

4. Locate the cut in split rings and peel packing (13) out.

NOTE: *A set of packing consists of 5 pieces.*

5. Inspect the stem (3.2) and packing box bore to determine if additional disassembly for clean up or replacement is required. Refer to Section III-F for disassembly.

6. Slide one set (5 pieces) of packing rings (13) on the stem (3.2). Cuts in the packing rings (13) should be staggered 60° apart on adjacent rings.

7. Slide the packing follower (16) with follower bushing (17) and packing flange (5) in place.

NOTE: *Packing follower must penetrate into the packing box.*

8. Install the nuts (22) on the studs. Tighten the nuts finger tight.

NOTE: *When valve is placed back in service, check to see that the packing is not leaking. Tighten the nuts evenly until leakage stops.*

K. Replacing End Thrust Bearing:

1. Disassemble the valve in accordance with Section III-F, steps 1 through 6.

2. Pull the stem (3.2) out of the bonnet far enough to remove and replace the end thrust bearing (14).

⚠ CAUTION

The disc (3.1) will drop out of the body (1). Be careful not to damage the stem bearing surface or disc edge.

3. Reassemble the stem (3.2) and disc (3.1) in accordance with Section III-H, steps 1 through 3.

4. Reassemble the valve in accordance with Section III-F, steps 2 through 4, in reverse order.

L. Adding Packing Ring(s):

1. Proceed to steps 1, 2 and 3 of Section III.J.

2. Slide the packing ring(s) (13) on the stem (3.2). Cuts in the packing ring(s) (13) should be staggered 60° apart on adjacent ring(s).

3. Repeat steps 7 and 8 of Section III-J.

SECTION IV

IV. PARTS ORDERING INFORMATION

When ordering replacement parts, refer to parts list which was included with IOM's at time of shipment. Contact your Cashco Representative and give him the following information:

1. Serial number found on actuator nameplate.
2. Part name.
3. Complete 17-character part number.

PREMIER EZO 3" – 10" LINED BODY SUB-ASSEMBLIES

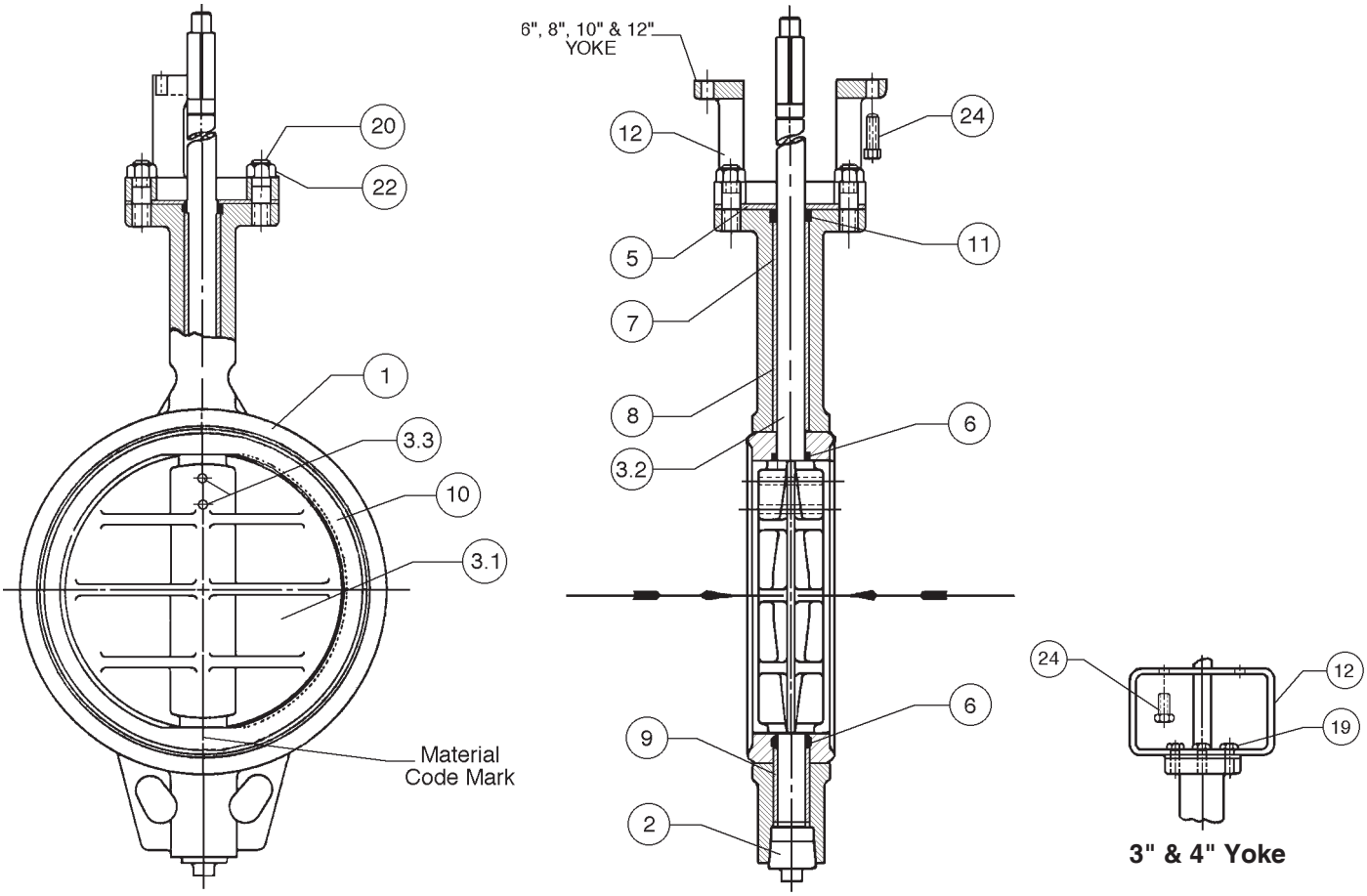

ITEM NO.	DESCRIPTION
1	Body
2	Pipe Plug
3	Disc / Stem Kit
3.1	Disc
3.2	Stem
3.3	Pin (Taper)
5	Packing Flange
6	O-Ring
7	Main Bearing

ITEM NO.	DESCRIPTION
8	Main Bearing
9	Main Bearing
10	Liner
11	O-Ring
12	Yoke
19	Cap Screw (3"-4")
20	Stud (Short) (6"-10")
22	Nut
24	Cap Screw (Mounting Body to Actuator)

PREMIER EZO 3" – 10" UNLINED BODY SUB-ASSEMBLIES

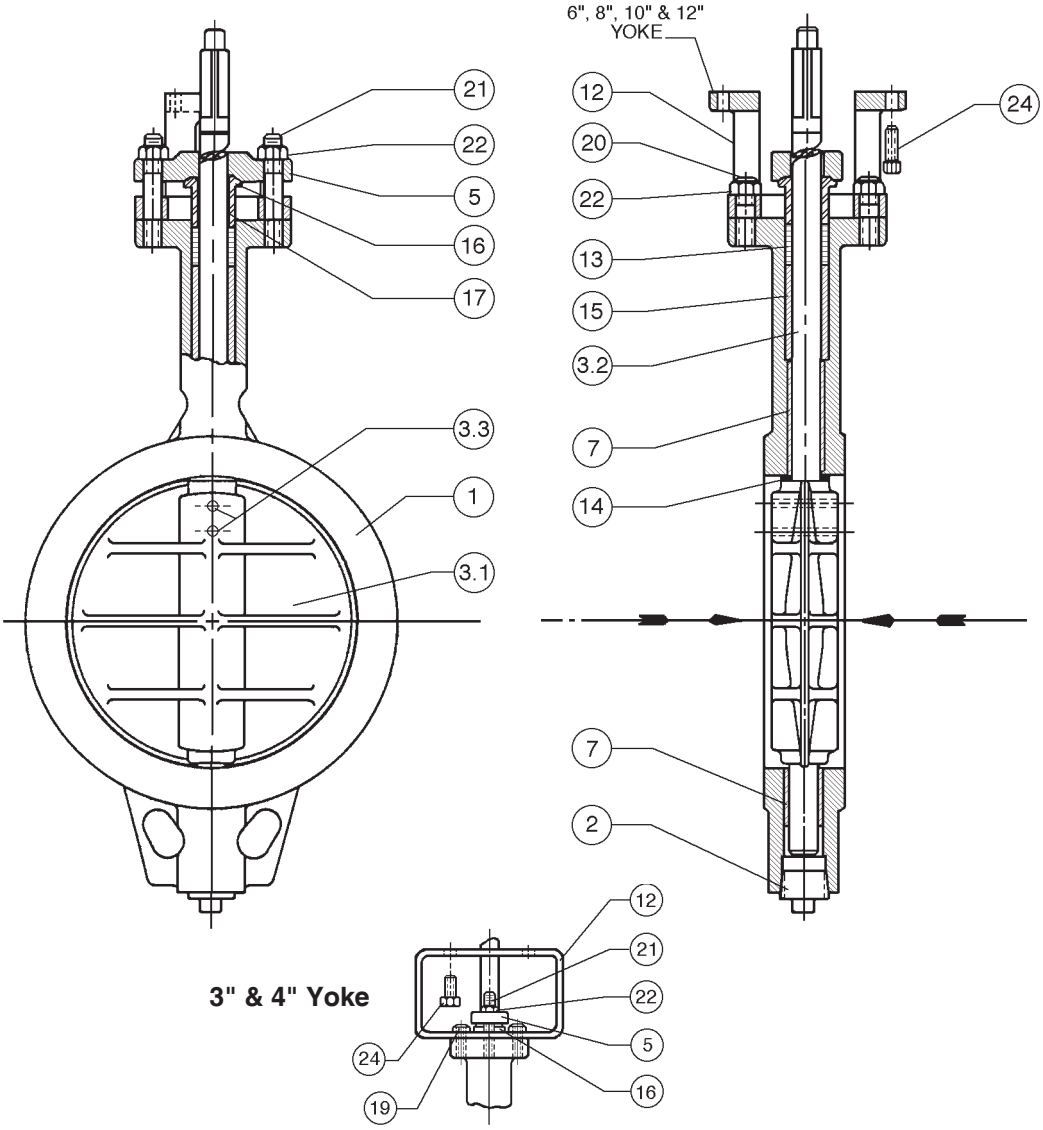

ITEM NO.	DESCRIPTION	ITEM NO.	DESCRIPTION
1	Body	14	Thrust Bearing
2	Pipe Plug	15	Upper Sleeve
3	Disc / Stem Kit	16	Packing Follower
3.1	Disc	17	Follower Bushing
3.2	Stem	19	Cap Screw (3"-4")
3.3	Pin (Taper)	20	Stud (Short) (6"-10")
5	Packing Flange	21	Stud (Packing Flange)
7	Main Bearing	22	Nut
12	Yoke	24	Cap Screw (Mounting Body to Actuator)
13	Packing		

Cashco, Inc.
P.O. Box 6
Ellsworth, KS 67439-0006
PH (785) 472-4461
Fax. # (785) 472-3539
www.cashco.com
email: sales@cashco.com

Cashco GmbH
Handwerkerstrasse 15
15366 Hoppegarten, Germany
PH +49 3342 30968 0
Fax. No. +49 3342 30968 29
www.cashco.com
email: germany@cashco.com

Cashco do Brasil, Ltda.
Al.Venus, 340
Indaiatuba - Sao Paulo, Brazil
PH +55 11 99677 7177
Fax. No.
www.cashco.com
email: brazil@cashco.com

Printed in U.S.A. Premier-IOM

ATEX 94/9/EC: Explosive Atmospheres and Cashco Inc. Regulators

NOTICE

Only for Product Codes wherein hazard category ATEX has been selected.

These valves satisfy the safety conditions according to EN 13463-1 and EN 13463-5 for equipment group IIG 2 c.

Caution: Because the actual maximum temperature depends not on the equipment itself, but upon the fluid temperature, a single temperature class or temperature cannot be marked by the manufacturer.

Specific Precaution to Installer: Electrical grounding of valve must occur to minimize risk of effective electrical discharges.

Specific Precaution to Installer: Atmosphere vent holes should be plugged to further minimize the risk of explosion.

Specific Precaution to Maintenance: The Valve Body/ Housing must be regularly cleaned to prevent buildup of dust deposits.

Specific Precaution to Maintenance: Conduct periodic Continuity Check between Valve Body/ Housing and Tank to minimize risk of electrical discharges.

Attention: When repairing or altering explosion-protected equipment, national regulations must be adhered to. For maintenance and repairs involving parts, use only manufacturer's original parts.

ATEX requires that all components and equipment be evaluated. Cashco pressure regulators are considered components. Based on the ATEX Directive, Cashco considers the location where the pressure regulators are installed to be classified Equipment-group II, Category 3 because flammable gases would only be present for a short period of time in the event of a leak. It is possible that the location could be classified Equipment-group II, Category 2 if a leak is likely to occur. Please note that the system owner, not Cashco, is responsible for determining the classification of a particular installation.

Product Assessment

Cashco performed a conformity assessment and risk analysis of its pressure regulator and control valve models and their common options, with respect to the Essential Health and Safety Requirements in Annex II of the ATEX directive. The details of the assessment in terms of the individual Essential Health and Safety Requirements, are listed in Table 1. Table 2 lists all of the models and options that were evaluated and along with their evaluation.
Models and options not listed in Table 2 should be assumed to not have been evaluated and therefore should not be selected for use in a potentially explosive environment until they have been evaluated.
Standard default options for each listed model were evaluated even if they were not explicitly listed as a separate option in the table. Not all options listed in the tables are available to all models listed in the tables. Individual TB's must be referenced for actual options.
When specifying a regulator that is to be used in a potentially explosive environment one must review the evaluations in Table 1 and 2 for the specific model and each and every option that is being specified, in order to determine the complete assessment for the unit.
A summary of the models and options found to have an impact on ATEX assessment due to potential ignition sources or other concerns from the ATEX Essential Health and Safety Requirements, are listed below.

1. The plastic knob used as standard on some models, (P1, P2, P3, P4, P5, P7, 3381, 4381, 1171, and 2171) is a potential ignition source due to static electricity. To demonstrate otherwise, the knob must be tested to determine if a transferred charge is below the acceptable values in IEC 60079-0 Section 26.14 (See items 25, 27, and 28 in Appendix A). Until the plastic knob has been shown to be acceptable, then either the metal knob option, or a preset outlet pressure option is required to eliminate this ignition source (See items 45 and 64 in Tables).

2. The pressure gauges offered as options on a few of the regulator models (DA's, P1-7, D, 764, 521), use a plastic polycarbonate window that is a potential ignition source due to static electricity. To demonstrate that the gauges are not a potential source of ignition, the gauges would need to be tested to determine if a transferred charge is below the acceptable values in IEC 60079-0 Section 26.14 or the pressure gauge supplier must provide documentation indicating the gauge is compliant with the ATEX Directive (See items 26, 27, and 28 in Appendix A). Until compliance is determined, regulators should not be ordered with pressure gauges for use in potentially explosive environments.

3. Tied diaphragm regulators with outlet ranges greater than 100 psig should be preset to minimize the risk that improper operation might lead to an outboard leak and a potentially explosive atmosphere (See item 6 in Table 1).

4. Regulators must be ordered with the non-relieving option (instead of the self-relieving option) if the process gas they are to be used with is hazardous (flammable, toxic, etc.). The self-relieving option vents process gas through the regulator cap directly into the atmosphere while the non-relieving option does not. Using regulator with the self- relieving option in a flammable gas system could create an explosive atmosphere in the vicinity of the regulator.

5. Regulators with customer supplied parts are to be assumed to not have been evaluated with regard to ATEX and thus are not to be used in a potentially explosive environment unless a documented evaluation for the specific customer supplied parts in question has been made. Refer to Table 1 for all models and options that have been evaluated.

Product Usage

A summary of ATEX related usage issues that were found in the assessment are listed below.

1. Pressure regulators and control valves must be grounded (earthed) to prevent static charge build-up due to the flowing media. The regulator can be grounded through any mounting holes on the body with metal to metal contact or the system piping can be grounded and electrical continuity verified through the body metal seal connections. Grounding of the regulator should follow the same requirements for the piping system. Also see item 30 in Table 1.

2. The system designer and users must take precautions to prevent rapid system pressurization which may raise surface temperatures of system components and tubing due to adiabatic compression of the system gas.

3. Heating systems installed by the user could possibly increase the surface temperature and must be evaluated by the user for compliance with the ATEX Directive. User installation of heating systems applied to the regulator body or system piping that affects the surface temperature of the pressure regulator is outside the scope of this declaration and is the responsibility of the user.

4. The Joule-Thomson effect may cause process gases to rise in temperature as they expand going through a regulator. This could raise the external surface temperature of the regulator body and downstream piping creating a potential source of ignition. Whether the Joule-Thomson effect leads to heating or cooling of the process gas depends on the process gas and the inlet and outlet pressures. The system designer is responsible for determining whether the process gas temperature may rise under any operating conditions. If a process gas temperature rise is possible under operating conditions, then the system designer must investigate whether the regulator body and downstream piping may increase in temperature enough to create a potential source of ignition.

The process gas expansion is typically modeled as a constant enthalpy throttling process for determining the temperature change. A Mollier diagram (Pressure – Enthalpy diagram with constant temperature, density, & entropy contours) or a Temperature – Entropy diagram with constant enthalpy lines, for the process gas, can be used to determine the temperature change. Helium and hydrogen are two gases that typically increase in temperature when expanding across a regulator. Other gases may increase in temperature at sufficiently high pressures.

Product Declaration

If the above issues are addressed by selecting options that do not have potential sources of ignition, avoiding options that have not been assessed, and by taking the proper usage issue precautions, then Cashco regulators can be considered to be a mechanical device that does not have its own source of ignition and thus falls outside the scope of the ATEX directive.